SI Series Standard Cylinder(ISO6431 Standard)

SI50 X 100 SI80 X 100 SI100 X 100

订购代号 / Ordering Code

SI	D	50 X 50	- 25	- S	- FA
Model	Type	Bore X Stroke	Adjustable Stroke	Magnet	Fixed Type
SI: Hidden Pull Rod Type	Blank: Standard double action D: Double-shaft & double-action J: Double-shaft, double-action & adjustable stroke Type		SIJ	Blank: Without magnet S: With magnet	Blank: Basic Type LB: Front & rear brackets FA: Front mounting flange FB: Rear mounting flange CA: Rear clevis(single earring) CB: Rear clevis(double earring) CR: Rear clevis(double earring) TC: Swiveling bracket TC-M: Swiveling bracket with foot seat

规格/Specification

Bore(mm)	32	40	50	63	80	100	125	160	200
Action	Double Action								
Working Medium	Air								
Fixed Type	Basic Type, FA, FB, CA,CB ,CR , LB , TC , TC-M								
Working Pressure	1~9 Kgf/cm²								
Proof Pressure	13.5Kgf/cm²								
Working Temperature	0~70℃								
Operating Speed Range	50~800mm/s								
Cushion Type	Adjustable cushion								
Adjustable Cushion Stroke	24						32		
Port Size	G1/8	G1/4			G3/8		G1/2		G3/4

※ SID、 SIJ Fixed Type：FA、FB、LB、TC、TC—M。

CE ISO9001

外形尺寸/Overall Dimension

TYPE: .SI

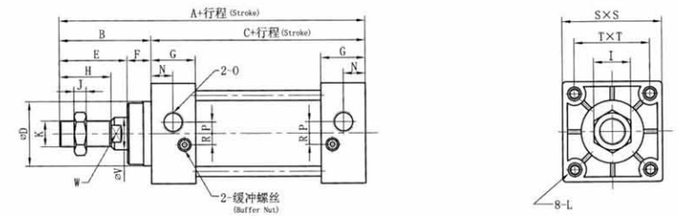

TYPE: SID

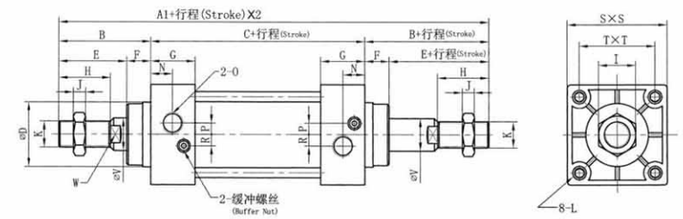

TYPE: SIJ

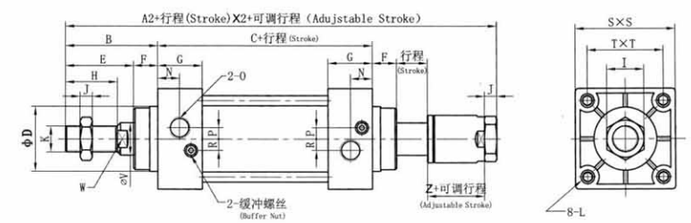

尺寸表/Dimension Sheet

Bore/Symbol	A	A1	A2	B	C	D	E	F	G	H	I	J	K	L
32	142	190	187	48	94	30	33	15	26	19.5	17	6	M10×1.25	M6
40	159	213	207	54	105	35	37	17	26	21	17	7	M12×1.25	M6
50	175	244	233	69	106	40	45	24	29.5	29	23	8	M16×1.5	M8
63	190	259	250	69	121	45	45	24	29.5	29	23	8	M16×1.5	M8
80	214	300	286	86	128	45	56	30	35	40	30	10	M20×1.5	M10
100	229	320	308	91	138	55	59	32	35	40	30	10	M20×1.5	M10
125	279	398	372.5	119	160	60	74	45	46	54	41	13.5	M27×2	M12
160	332	484	448	152	180	65	94	58	50	72	55	18	M36×2	M16
200	347	514	472	167	180	75	107	60	50	72	55	18	M36×2	M16

Bore/Symbol	M	O	P	R	S	T	V	W	Z
32	13	G1/8	4	6.5	46	32.5	12	10	21
40	14	G1/4	4	9	52	38	16	14	21
50	15.5	G1/4	5	10.5	65	46.5	20	17	23
63	16.5	G3/8	9	12	75	56.5	20	17	23
80	19	G3/8	11.5	14	95	72	25	22	29
100	19	G1/2	17	15	114	89	25	22	29
125	23	G1/2	14	14	140	110	32	27	35
160	25	G3/4	15	20	180	140	40	36	40
200	25	G3/4	15	20	220	175	40	36	40

MGP Series New Compact Tri-Rod Cylinder

Load and Torque

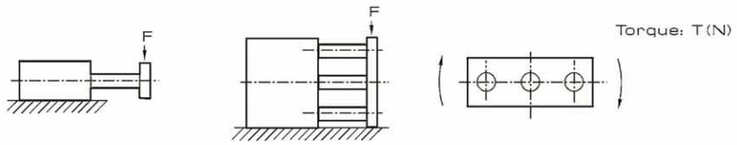

Bore (mm)	Sreies	Max. Transverse Load F (N) Stroke (mm)											
		10	20	25	30	40	50	75	100	125	150	175	200
12	MGPM	24	19	-	17	14	13	26	22	-	-	-	-
	MGPL	37	27	-	22	35	30	23	18	-	-	-	-
16	MGPM	38	31	-	27	23	21	37	32	-	-	-	-
	MGPL	54	40		32	54	47	35	28	-	-	-	-
20	MGPM	-	49	-	43	38	35	87	75	66	59	54	49
	MGPL	-	58	-	48	101	90	70	58	62	54	48	43
25	MGPM	-	69	-	60	54	49	116	100	88	79	71	65
	MGPL	-	82	-	68	132	118	93	77	80	70	62	55
32	MGPM	-	-	203	-	-	164	182	159	142	127	116	106
	MGPL	-	-	113	-	-	78	130	107	130	114	101	90
40	MGPM	-	-	203	-	-	164	182	159	142	127	116	106
	MGPL	-	-	113	-	-	78	129	106	130	114	101	90
50	MGPM	-	-	296	-	-	245	273	241	216	195	179	164
	MGPL	-	-	120	-	-	83	178	148	148	129	114	102
63	MGPM	-	-	296	-	-	245	273	241	216	195	179	164
	MGPL	-	-	117	-	-	81	176	145	145	126	111	99
80	MGPM	-	-	352	-	-	297	368	329	298	272	251	232
	MGPL	-	-	125	-	-	99	281	240	208	184	163	147
100	MGPM	-	-	515	-	-	445	498	450	410	377	349	325
	MGPL	-	-	138	-	-	108	395	340	297	263	235	211

Max. Forque T (N*m) Stroke (mm)											
10	20	25	30	40	50	75	100	125	150	175	200
0.39	0.32	-	0.27	0.24	0.21	0.43	0.36	-	-	-	-
0.78	0.66	-	0.57	0.93	0.85	0.69	0.58	-	-	-	-
0.69	0.58	-	0.49	0.43	0.38	0.69	0.58	-	-	-	-
1.23	1.06	-	0.92	1.53	1.40	1.16	0.99	-	-	-	-
-	1.05	-	0.93	0.83	0.75	1.88	1.63	1.44	1.28	1.16	1.06
-	1.70	-	1.52	3.06	2.87	2.47	2.17	2.38	2.16	1.98	1.82
-	1.76	-	1.55	1.38	1.25	2.96	2.57	2.26	2.02	1.83	1.67
-	2.80	-	2.53	4.67	4.39	3.81	3.36	3.65	3.31	3.02	2.78
-	-	6.35	-	-	5.13	5.69	4.97	4.42	3.98	3.61	3.31
-	-	4.76	-	-	3.86	6.53	5.75	7.10	6.46	5.92	5.47
-	-	7.00	-	-	5.66	6.27	5.48	4.87	4.38	3.98	3.65
-	-	5.24	-	-	4.25	7.19	6.33	7.81	7.11	6.52	6.02
-	-	13.0	-	-	10.8	12.0	10.6	9.50	8.60	7.86	7.24
-	-	7.02	-	-	5.76	12.3	10.9	11.2	10.2	9.40	8.69
-	-	14.7	-	-	12.1	13.5	12.0	10.7	9.69	8.86	8.16
-	-	77.7	-	-	6.35	13.7	12.2	12.5	11.4	10.5	9.65
-	-	22.0	-	-	18.6	22.9	20.5	18.6	17.0	15.6	14.5
-	-	10.3	-	-	9.35	24.8	22.7	20.9	19.4	18.0	16.9
-	-	38.8	-	-	33.5	37.5	33.8	30.9	28.4	26.2	24.4
-	-	13.6	-	-	12.2	41.1	37.9	35.1	32.7	30.5	28.6

CE ISO9001

外形尺寸/Overall Dimension

MGP

Ø12 ~ Ø25

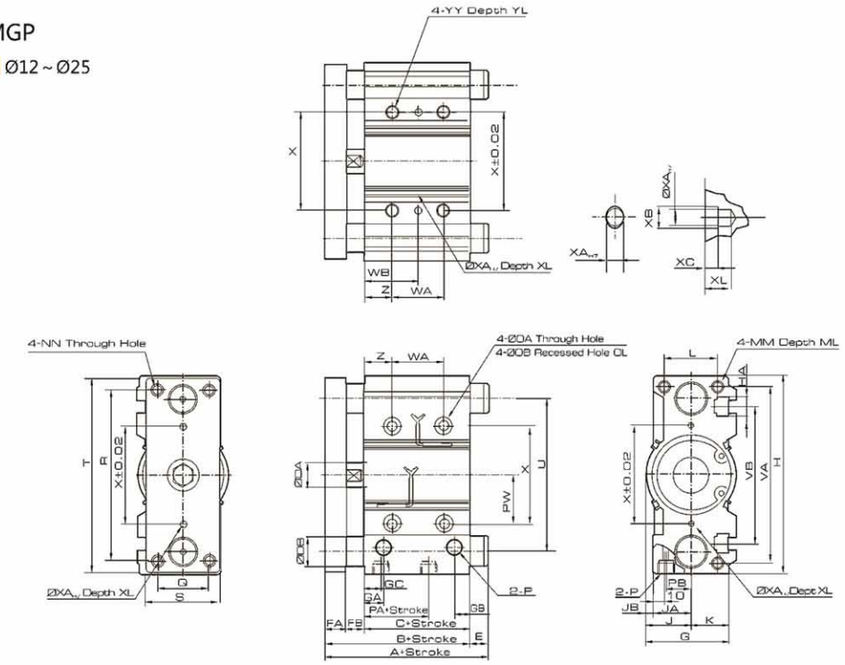

尺寸表/Dimension Sheet

MGPM, MGPL (Ø12 ~ Ø25)

Bore (mm)	Standard Stroke	B	C	DA	FA	FB	G	GA	GB	H	HA	J	K	L	MM	ML	NN	OA	OB	OL	P	PA	PB	PW	Q
12	10,20,30,40, 50,75,100	42	29	6	8	5	26	11	7.5	58	M4	13	13	18	M4x0.7	10	M4x0.7	4.3	8	4.5	M5x0.8	13	8	18	14
16		46	33	8	8	5	30	11	8	64	M4	15	15	22	M5x0.8	12	M5x0.8	4.3	8	4.5	M5x0.8	15	10	19	16
20		53	37	10	10	6	36	10.5	8.5	83	M5	18	18	24	M5x0.8	13	M5x0.8	5.6	9.5	5.5	Rc1/8	12.5	10.5	25	18
25	20,30,40,50,75,100, 125,150,175,200	53.5	37.5	12	10	6	42	11.5	9	93	M5	21	21	30	M6x1.0	15	M6x1.0	5.6	9.5	5.5	Rc1/8	12.5	13.5	28.5	26

Bore (mm)	Standard Stroke	R	S	T	U	VA	VB	WA Below 30st	WA 40st to 100st	WA 125st or above	WB Below 30st	WB 40st to 100st	WB 125st or below	X	XA	XB	XC	XL	YY	YL	Z
12	10,20,30,40,	48	22	56	41	50	37	20	40	-	15	25	-	23	3	3.5	3	6	M5x0.8	10	5
16	50,75,100	54	25	62	46	56	38	24	44	-	17	27	-	24	3	3.5	3	6	M5x0.8	10	5
20	20,30,40,50,75,	70	30	81	54	72	44	24	44	120	29	39	77	28	3	3.5	3	6	M6x1.0	12	17
25	100,125,150,175,200	78	38	91	64	82	50	24	44	120	29	39	77	34	4	4.5	3	6	M6x1.0	12	17

MGPM (Slidable Bearing)

Bore (mm)	A Below 50st	A Above 50st	DB	E Below 50st	E Above 50st
12	42	60.5	8	0	18.5
16	46	64.5	10	0	18.5
20	53	84.5	12	0	31.5
25	53.5	85	16	0	31.5

MGPL (Ball Bearing)

Bore (mm)	A Below 30st	A 30st to 100st	A 100st or Above	DB	E Below 30s	E 30st to 100st	E 100st or Above
12	43	55	85	6	1	13	43
16	49	65	95	8	3	19	49
20	63	80	104	10	10	27	51
25	69.5	80.5	104.5	13	16	32	51

外形尺寸/Overall Dimension CXS Series Twin Rod Cylinder

CXS

Ø6

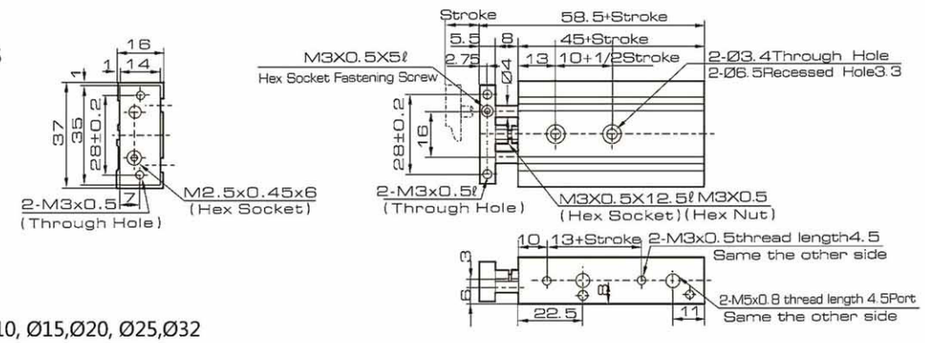

Ø10, Ø15,Ø20, Ø25,Ø32

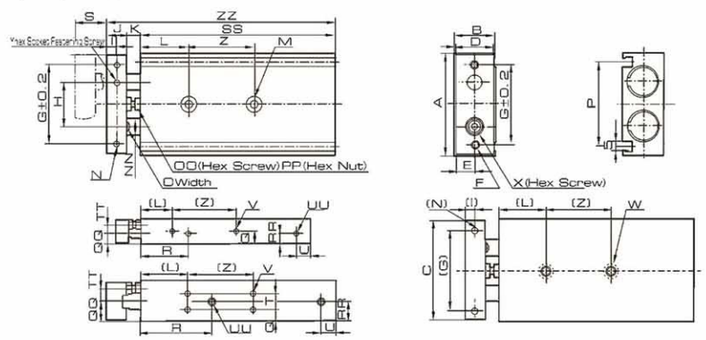

Dimension

Model	A	B	C	D	E	F	G	H	I	J	K	L	M	N	NN	O	OO	P	PP	Q	QQ	R	RR	S	SS	T	TT	U	UU	V	W	X	Y	Z	ZZ
CXS○10-10	46	17	44	15	7.5	2-M4 x0.7 (Port)	35	20	4	8	9	20	2-Ø3.4 Port 2-Ø6.5 Thread length 3.3	2-M3 x0.5 Thread length 5	Ø6	5	M4 x 0.7 x 14.5L	33.6	M4 x 0.7	8.5	7	30	7	10	65	-	5	8	4-M5 x0.8 Thread length 4.5 (Port) (Same the other side)	4-M3 x0.5 Thread length 4.5 (Same the other side)	2-M4 x0.7 Thread length 7	M3 x 0.5 x 10L	M3 x 0.5 x 5L	30	82
CXS○10-20																								20	75										92
CXS○10-30																								30	85								40		102
CXS○10-40																								40	95										112
CXS○10-50																								50	105										122
CXS○15-10	58	20	56	18	9	2-M5 x0.8 (Port)	45	25	5	10	9	30	2-Ø4.3 Port 2-Ø8 Thread length 4.4	2-M4 x0.7 Thread length 6	Ø8	6	M4 x 0.7 x 14.5L	48	M4 x 0.7	10	10	38.5	10	10	70	-	5	8	4-M5 x0.8 Thread length 4.5 (Port) (Same the other side)	4-M4 x0.7 Thread length 5 (Same the other side)	2-M5 x0.8 Thread length 8	M5 x 0.8 x 10L	M4 x 0.7 x 4L	25	89
CXS○15-20																								20	80										99
CXS○15-30																								30	90								35		109
CXS○15-40																								40	100										119
CXS○15-50																								50	110										129
CXS○20-10	64	25	62	23	11.5	2-M5 x0.8 (Port)	50	28	6	12	12	30	2-Ø5.5 Port 2-Ø9.5 Thread length 5.3	2-M4 x0.7 Thread length 6	Ø10	8	M6 x 1.0 x 18.5L	53	M6 x 1.0	12.5	12.5	45	7.76	10	80	9.5	6.5	8	4-M5 x0.8 Thread length 4.5 (Port) (Same the other side)	8-M4 x0.7 Thread length 6 (Same the other side)	2-M6 x1.0 Thread length 10	M6 x 1.0 x 12L	M5 x 0.8 x 5L	30	104
CXS○20-20																								20	90										114
CXS○20-30																								30	100								40		124
CXS○20-40																								40	110										134
CXS○20-50																								50	120										144
CXS○20-75																								75	145								60		169
CXS○20-100																								100	170										194
CXS○25-10	80	30	78	28	14	2-M6 x1.0 (Port)	60	35	6	12	12	30	2-Ø6.9 Port 2-Ø11 Thread length 6.3	2-M5 x0.8 Thread length 7.5	Ø12	10	M6 x 1.0 x 18.5L	64	M6 x 1.0	15	15	46	15	10	82	13	9	9	4-1/8 Thread length 6.5 (Port) (Same the other side)	8-M5 x0.8 Thread length 7.5 (Same the other side)	2-M8 x1.25 Thread length 12	M6 x 1.0 x 14L	M6 x 1.0 x 5L	30	106
CXS○25-20																								20	92										116
CXS○25-30																								30	102								40		126
CXS○25-40																								40	112										136
CXS○25-50																								50	122										146
CXS○25-75																								75	147								60		171
CXS○25-100																								100	172										196
CXS○32-10	98	38	96	36	18	2-M6 x1.0 (Port)	75	44	8	16	14	30	2-Ø6.9 Port 2-Ø11 Thread length 6.3	2-M5 x0.8 Thread length 8	Ø16	13	M8 x 1.25 x 23L	76	M8 x 1.25	19	19	56	19	10	92	20	11.5	10	4-1/8 Thread length 6.5 (Port) (Same the other side)	8-M5 x0.8 Thread length 7.5 (Same the other side)	2-M8 x1.25 Thread length 12	M8 x 1.25 x 16L	M8 x 1.25 x 8L	40	122
CXS○32-20																								20	102										132
CXS○32-30																								30	112								50		142
CXS○32-40																								40	122										152
CXS○32-50																								50	132										162
CXS○32-75																								75	157								70		187
CXS○32-100																								100	182										212

CE ISO9001

MGP New Compact Tri-Rod Cylinder(ϕ20~ϕ100)

订购代号 / Ordering Code

MGP M - 20 X 100

Type	Bore	Stroke
M:slide bearing type	10 50	
L:ball guide bearing	20 75	
	30 100	
	40	

Ordering Code: (examples)

- Cylinder dia needed: 12 , stroke: 50, slid able bearing. Right model number: MGPM 12-50
- Cylinder dia needed: 40, stroke: 100 , Ball bearing with two sensor switches, lead wire length 0.5 m. Right model number: MGPM 40-100-Z73

规格/Specification

Bore (mm)		12	16	20	25	32	40	50	63	80	100
Operation Fluid		Air									
Operation		Double Acting									
Anti-pressure testing pressure		1.5 MPa (15.3 kgf/cm²)									
Max. Operation Pressure		1.0 MPa (10.2 kgf/cm²)									
Min. Operation Pressure		0.12 MPa (1.2 kgf/cm²)									
Ambient and fluid temperature		-10 ~ +60 ℃									
Piston Veocity		50~500 mm/s								50~400 mm/s	
Buffer		Rubber Buffer									
Stroke Tolerance		+1.5 mm 0									
*Lubrication		Non-lub									
Bearing		Slidable bearing/Ball Bearing									
Non-rotating rod precision	Slidable bearing	± 0.08°		± 0.07°		± 0.06°		± 0.05°		± 0.04°	
	Ball Bearing	± 0.10°		± 0.09°		± 0.08°		± 0.06°		± 0.05°	
Port Size Rc (PT)		M5 x 0.8		1/8"				1/4"		3/8"	

* If lubricant is demanded, please choose clear No.1 lubricant, ISOVG32.

Stroke

Bore (mm)	Standard Stroke (mm)	** Sensor Switch Optional Model (For slide installation)
12 , 16	10 , 20 , 30 , 40 , 50 , 75 , 100	D-Z73L D-Z76L D-Z80L D-Y59AL D-Y59BL
20 , 25	20 , 30 , 40 , 50 , 75 , 100 , 125 , 175 , 200	
32 , 40 , 50 , 63 , 80 , 100	20 , 50 , 75 , 100 , 125 , 150 , 175 , 200	

* Strokes (from 5, 10, 20, 30, 35.....) are added with 5, 10, 15, 20 mm thick gasket respectively, ex: MGPM50-10 is with 15 mm thickness gasket (MGPM50-25).

** Please refer to sensor switch series pages in this catalog for spec. and characteristic. Code for lead wire length as follow: Blank - 0.5 m, L-3 m. Example: D-Y59AL, D-Y59AL.

外形尺寸/Overall Dimension CU Series Free Installation Cylinder(ϕ6~ϕ32mm)

■C□UK

■Ø6, Ø10

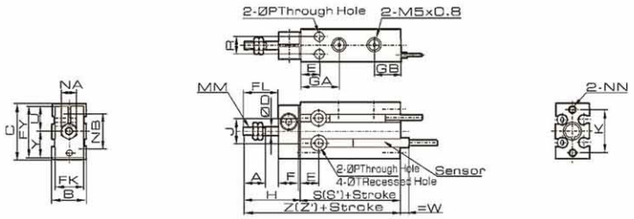

■Ø16, Ø25

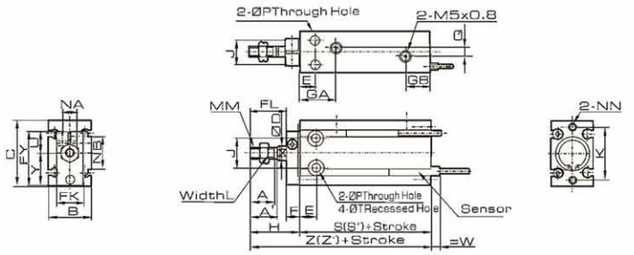

■Ø32

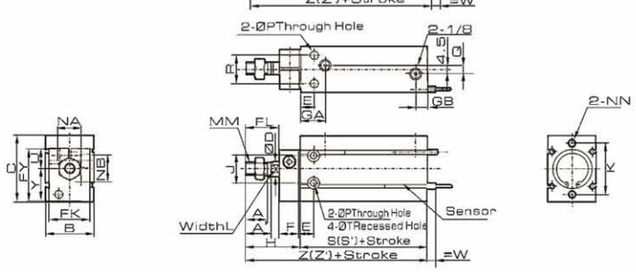

Dimension

Model	A	A'	B	C	ØD	E	F	FL	FK	FY	GA	GB	H	J	K	L	MM	NA	NB	NN	ØP	Q	R	ØT	U	Y
C□UK6	7	-	13	22	3	7	8	9	11	20.5	14.5	10	18	10	17	-	M3x0.5	6	14	M3x0.5deep5	3.4	-	7	6deep4.8	10	10.5
C□UK10	10	-	15	24	4	7	8	12	12	22	15.5	10	21	11	18	-	M4x0.7	7	15	M3x0.5deep5	3.4	-	9	6deep5	10.5	11.5
C□UK16	11	12.5	20	32	6	7	8	17	13	28	16.5	11.5	26	14	25	5	M5x0.8	6	18	M4x0.7deep6	4.5	4	12	7.6deep6.5	12.5	15.5
C□UK20	12	14	26	40	8	9	8	20	16	33	19	12.5	29	16	30	6	M6x1.0	8	20	M5x0.8deep8	5.5	9	16	9.3deep8	13.5	19.5
C□UK25	15.5	18	32	50	10	10	10	22	20	43.5	21.5	13	33	20	38	8	M8x1.25	10	28	M5x0.8deep8	5.5	9	20	9.3deep9	19	24.5
C□UK32	19.5	22	40	62	12	11	12	29	24	51.5	23	12.5	42	24	48	10	M10x1.25	12	32	M6x1.0deep9	6.6	13.5	24	11deep11.5	21	30.5

Double Acting

Model	H	Without Magnet		With Magnet		
		S	Z	W	S'	Z'
C□UK6-□D	18	33	51	2.5	33	51
C□UK10-□D	21	36	57	1	36	57
C□UK16-□D	26	30	56	0	40	66
C□UK20-□D	29	36	65	1	46	75
C□UK25-□D	33	40	73	-1	50	83
C□UK32-□D	42	42	84	-4	52	94

Single Acting (Sprung-in)

Model	H	Without Magnet						With Magnet								
		S			Z			W	S'			Z'		
		5st	10st	15st	5st	10st	15st		5st	10st	15st	5st	10st	15st
C□UK6-□D	18	38	43	48	56	61	66	2.5	38	43	48	56	61	66
C□UK10-□D	21	41	46	56	62	67	77	1	41	46	56	62	67	77
C□UK16-□D	26	35	40	50	61	66	76	0	45	50	60	71	76	86
C□UK20-□D	29	41	46	56	70	75	85	1	51	56	66	80	85	95
C□UK25-□D	33	45	50	60	78	83	93	-1	55	60	70	88	93	103
C□UK32-□D	42	47	52	62	89	94	104	-4	57	62	72	99	104	114

Single Acting (Sprung-out)

Model	H			ØT	U	Y	Without Magnet						With Magnet					
							S			Z			W	S'			Z'	
	5st	10st	15st				5st	10st	15st	5st	10st	15st		5st	10st	15st	5st	10st	15st
C□UK6-□T	23	28	33	6 deep 4.8	10	10.5	38	43	48	61	71	81	2.5	38	43	48	61	71	81
C□UK10-□T	26	31	36	6 deep 5	10.5	11.5	41	46	56	67	77	92	1	41	46	56	67	77	92
C□UK16-□T	31	36	41	7.6 deep 6.5	12.5	15.5	45	50	60	76	86	101	0	45	50	60	76	86	101
C□UK20-□T	34	39	44	9.3 deep 8	13.5	19.5	41	46	56	75	85	100	1	51	56	66	85	95	110
C□UK25-□T	38	43	48	9.3 deep 9	19	24.5	45	50	60	83	93	108	-1	55	60	70	93	103	118
C□UK32-□T	47	52	57	11 deep 11.5	21	30.5	47	52	62	94	104	119	-4	57	62	72	104	114	129

CE ISO9001

CXS Series Twin Rod Cylinder (ϕ6~ϕ10)

订购代号 / Ordering Code

CXS M - 20 X 100

Type	Bore	Stroke
M:slide bearing type	6 20	
L:ball guide bearing	10 25	
	15 32	

■Symbol

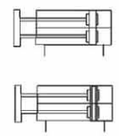

■Stroke/Sensor Switch Model

Bore (mm)	Standard Stroke	*Sensor Switch Model (Install by Orbit type)
6	10, 20, 30, 40, 50	D-Z73L D-Z76L D-Z80L D-Y59AL D-Y59BL
10	10, 15, 20, 25, 30, 40, 45,50, 60, 70,75,	
15	10, 15, 20, 25, 30, 40, 45,50, 60, 70, 75, 80, 90, 100	
20		
25		
32		

规格/Specification

Bore (mm)	6	10	15	20	25	32
Operation Fulid	Air					
Operation	Double Acting					
Proof Pressure	1.05 MPa					
Max. Operation Pressure	0.7 MPa					
Ambient and fluid temp	5 ~ 60 ℃					
Buffer	Both end Rubber Gasket Cushioning					
Piston Speed	30 ~ 800 mm/s	30 ~ 800 mm/s	30 ~ 700 mm/s		30 ~ 600 mm/s	
*Lubrication	Non-lub					
Adjustable stroke range	Returned Stroke 0 ~ -5 mm					
Bearing	Slidable bearing/Ball Bearing					
Non-rotating rod precision: Slidable bearing	± 0.1°					
Non-rotating rod precision: Ball Bearing	± 0.1°					
Port Size Rc	M5 x 0.8					1/8
Structure	Double Cylinder (Double force)					

Cylinder body can be fixed, position port can be choosed

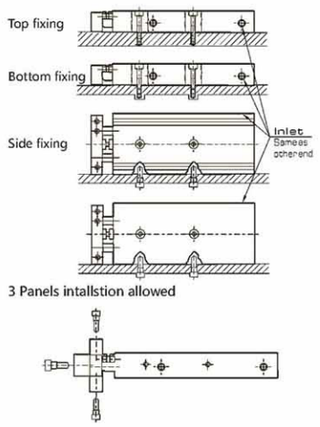

■Suitable Bore Size Ø6

Model	Stroke				
	10	20	30	40	50
CXSM6	0.8	0.66	0.54	0.46	0.40
CXLM6	1.08	0.88	0.69	0.59	0.49

Suitable bore size Ø6

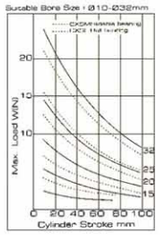

Max. Allowable Load

Below A indicates type ofmouting, while below B indicates type of installation.

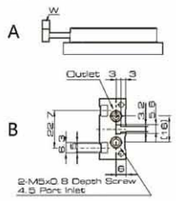

CU Series Free Installation Cylinder(ϕ6~ϕ32)


CU


CDUK

订购代号 / Ordering Code

C D U - K - 25 X 30 - D

Model	Type	Bore	Stroke	Operation
CU:without magnet ring CDU:with built -in magnet ring	Blank:basic type K:non-rotary piston rod type	6 20 10 25 16 32		D:double-action S:single-action spring return T:single-action spring-extend

Symbol:

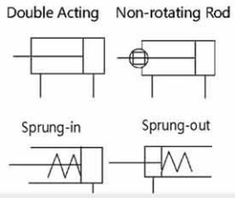

Stroke/Sensoric Switch Model

Bore (mm)	Standard Stroke Double Acting	Standard Stroke Single Acting	Stroke Length (Double Acting)	*Sensor Switch Model (Direct mounting)
6	5, 10, 15, 20, 25, 30	5, 10, 15,	40, 50, 60	D-A90L D-A93L D-A96L D-A80L D-F9NL D-F98L
10				
16				
20	5, 10, 15, 20, 25, 30, 40, 50		60, 70, 80, 90, 100	
25				
32				

规格/Specification

Bore (mm)	6	10	16	20	25	32
Operating Fluid	Air					
Operation	D: Double Acting, S: Single Acting (Sprung-in), T: Single Acting (Sprung-out)					
Max. Operating Pressure	0.7 MPa					
Proof Pressure	1.0 MPa					
Ambient and fluid temp	5~60 ℃					
Cushion	Both end with Rubber Gasket Cushioning					
Lubricant	Non-lub					
Installation Type	Free (Multi- installation)					
Precision non-rotating rod	± 0.8°			± 0.5°		
Port Size	M5 x 0.8					1/8

CE ISO9001

外形尺寸/Overall Dimension

C□U Double/Single Acting

Ø6, Ø10

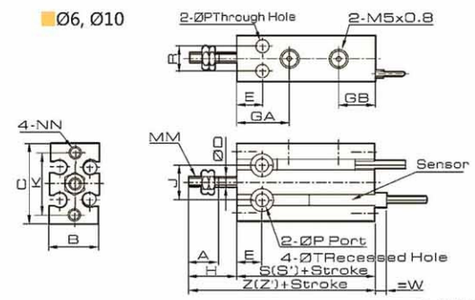

Ø16, Ø25

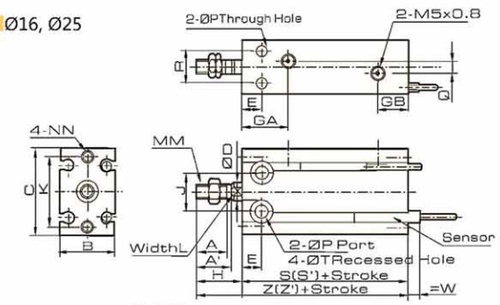

Ø32

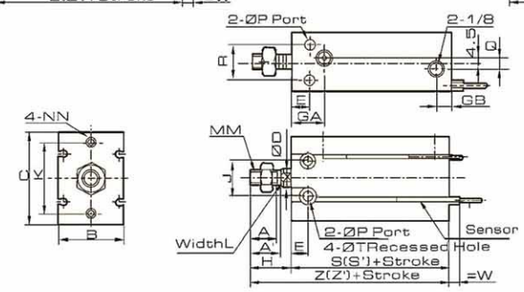

Dimension

Model	A	A'	B	C	ØD	E	GA	GB	J	K	L	MM	NN	ØP	Q	R	ØT
C□U6	7	-	13	22	3	7	14.5	10	10	17	-	M3x0.5	M3x0.5deep5	3.4	-	7	6deep4.8
C□U10	10	-	15	24	4	7	15.5	10	11	18	-	M4x0.7	M3x0.5deep5	3.4	-	9	6deep5
C□U16	11	12.5	20	32	6	7	16.5	11.5	14	25	5	M5x0.8	M4x0.7deep6	4.5	4	12	7.6deep6.5
C□U20	12	14	26	40	8	9	19	12.5	16	30	6	M6x1.0	M5x0.8deep8	5.5	9	16	9.5deep8
C□U25	15.5	18	32	50	10	10	21.5	13	20	38	8	M8x1.25	M5x0.8deep8	5.5	9	20	9.5deep9
C□U32	19.5	22	40	62	12	11	23	13	24	48	10	M10x1.25	M6x1.0deep9	6.6	13.5	24	11deep11.5

Double Acting

Model	H	Basic Type S	Basic Type Z	W	With Magnet S'	With Magnet Z'
C□U6-□D	13	33	46	2.5	33	46
C□U10-□D	16	36	52	1	36	52
C□U16-□D	16	30	46	0	40	56
C□U20-□D	19	36	55	1	46	65
C□U25-□D	23	40	63	-1	50	73
C□U32-□D	27	42	69	-4	52	79

Single Acting (Sprung-in)

Model	H	Basic Type S 5st	Basic Type S 10st	Basic Type S 15st	Basic Type Z 5st	Basic Type Z 10st	Basic Type Z 15st	W	With Magnet S' 5st	With Magnet S' 10st	With Magnet S' 15st	With Magnet Z' 5st	With Magnet Z' 10st	With Magnet Z' 15st
C□U6-□D	13	38	43	48	51	56	61	2.5	38	43	48	51	56	61
C□U10-□D	16	41	46	56	57	62	72	1	41	46	56	57	62	72
C□U16-□D	16	35	40	50	511	56	66	0	45	50	60	61	66	76
C□U20-□D	19	41	46	56	60	65	75	1	51	56	66	70	75	85
C□U25-□D	23	45	50	60	68	73	83	-1	55	60	70	78	83	93
C□U32-□D	27	47	52	62	74	79	89	-4	57	62	72	84	89	99

Single Acting (Sprung-out)

Model	H 5st	H 10st	H 15st	Basic Type S 5st	Basic Type S 10st	Basic Type S 15st	Basic Type Z 5st	Basic Type Z 10st	Basic Type Z 15st	W	With Magnet S' 5st	With Magnet S' 10st	With Magnet S' 15st	With Magnet Z' 5st	With Magnet Z' 10st	With Magnet Z' 15st
C□U6-□T	18	23	28	38	43	48	56	66	76	2.5	38	43	48	56	66	76
C□U10-□T	21	26	31	41	46	56	62	72	87	1	41	46	56	62	72	87
C□U16-□T	21	26	31	45	50	60	66	76	91	0	45	50	60	66	76	91
C□U20-□T	24	29	34	41	46	46	65	75	90	1	51	56	66	75	85	100
C□U25-□T	28	33	38	45	50	50	73	73	98	-1	55	60	70	83	93	108
C□U32-□T	32	37	42	47	52	52	79	79	104	-4	57	62	72	89	99	114

CE ISO9001

外形尺寸/Overall Dimension CJ2 Series Stainless Steel Mini-Cylinder

CJ2B Double Acting

Ø6

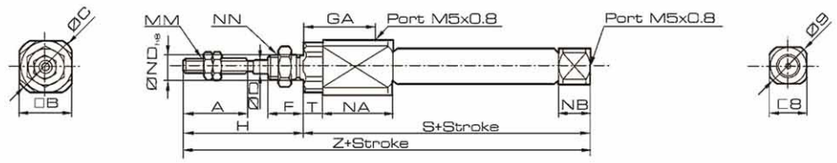

Ø10, 16

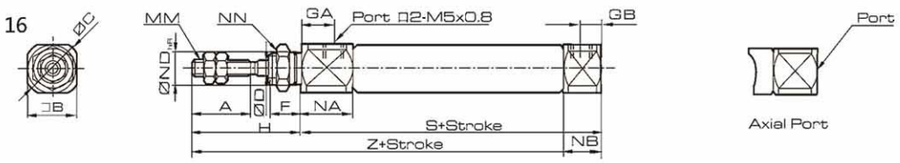

Dimension

Bore (mm)	A	B	C	D	F	GA	GB	H	MM	NA	NB	ND h8	NN	S	T	Z
6	15	12	14	3	8	14.5	-	28	M3 x 0.5	16	7	6	M6 x 1.0	49	3	77
10	15	12	14	4	8	8	5	28	M4 x 0.7	12.5	9.5	8	M8 x 1.0	46	-	74
16	15	18	20	5	8	8	5	28	M5 x 0.8	12.5	9.5	10	M10 x 1.0	47	-	75

Foot/ Flange

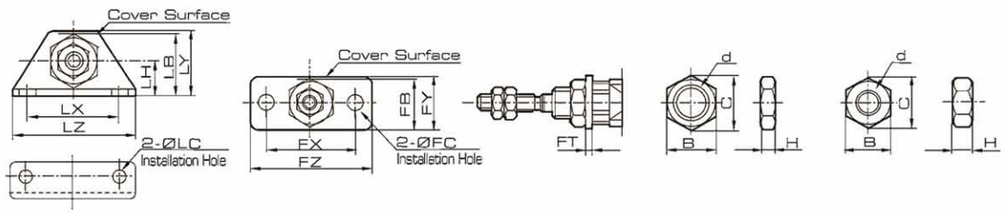

Dimension

Bore (mm)	Foot Seat							Flange							Installation Nut					Rod end Nut				
	Parts No.	LB	ΦLC	LH	LX	LY	LZ	Parts No.	FB	ΦFC	FX	FY	FZ	FT	Parts No.	B	C	d	H	Parts No.	B	C	d	H
6	CJ-L006B	13	4.5	9	24	16.5	32	CJ-F006B	11	4.5	24	14	32	1.6	SNJ-006B	8	9.2	M6x1	4	NTJ006A	5.5	6.4	M3x0.5	2.4
10	CJ-L010B	15	4.5	9	24	16.5	32	CJ-F010B	13	4.5	24	14	32	1.6	SNJ-010B	11	12.7	M8x1	4	NTJ010A	7	8.1	M4x0.7	3.2
16	CJ-L016B	23	5.5	14	33	25	42	CJ-F016B	19	5.5	33	20	42	2.3	SNJ-016B	14	16.2	M10x1	4	NTJ015A	8	9.2	M5x0.8	4

外形尺寸/Overall Dimension CJ2 Series Stainless Steel Mini-Cylinder

CJ2D Double Earring Type

Ø10.16

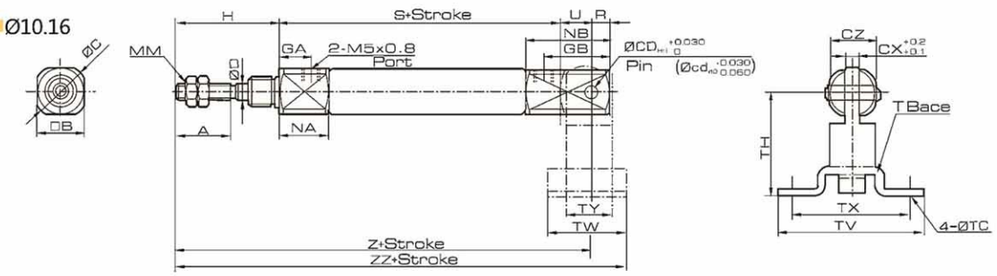

Bore (mm)	A	B	C	CD(cd)	CX	CZ	D	GA	GB	H	MM	NA	NB	R	S	U	Z	ZZ
10	15	12	14	3.3	3.2	12	4	8	18	28	M4x0.7	12.5	22.5	5	46	8	82	93
16	15	18	20	5	6.5	18	5	8	23	28	M5x0.8	12.5	27.5	8	47	10	85	99

T Base

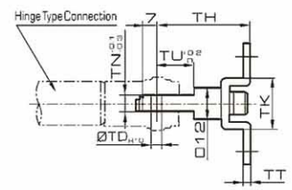

Hinge with Pin

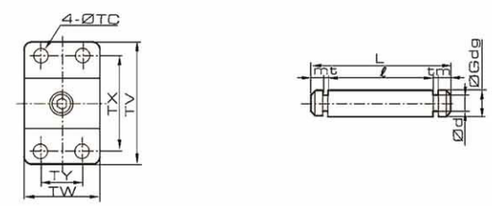

Bore (mm)	T Type piston rod clevis												Pin for piston rod clevis						
	Part Code	TC	TD	TH	TK	TN	TT	TU	TV	TW	TX	TY	Part Code	Dd9	Φd	L	e	m	t
10	CJ-T010B	4.5	3.3	29	18	3.1	2	9	40	22	32	12	CD-J010	3.3	3	15.2	12.2	1.2	0.3
16	CJ-T016B	5.5	5	35	20	6.4	2.3	14	48	28	38	16	CD-Z015	5	4.8	22.7	18.3	1.5	0.7

I Type Piston rod clevis

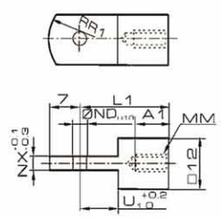

Y Type Piston rod clevis

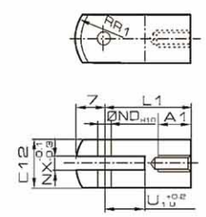

Pin for piston rod clevis

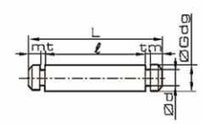

Bore (mm)	I Type piston rod clevis								Y Type piston rod clevis								Pin for piston rod clevis							
	Part Code	A1	ND	L1	MM	U1	NX	R1	Part Code	A1	ND	L1	MM	U1	NX	R1	Part Code	ΦDdg	L	d	e	m	t
10	I-J010B	8	3.3	21	M4x0.7	9	3.1	8	Y-J010B	8	3.3	21	M4x0.7	10	3.2	8	IY-J010	3.3	16.2	3	12.2	1.7	0.3
16	I-J016B	8	5	25	M5x0.8	14	6.4	12	Y-J016B	11	5	21	M5x0.8	10	6.5	12	IY-J015	5	16.6	4.8	12.2	1.5	0.7

外形尺寸/Overall Dimension

Single Acting Cylinder

Model	B			ΦD	E	F		H	C	ΦI	J	K
	5st	10st	20st			5st	10st					
CQ2B12-□S	22	27	-	6	25	5	5	M3x0.5	6	32	-	5
CQ2B16-□S	23.5	28.5	-	8	29	5.5	5.5	M4x0.7	8	38	-	6
CQ2B20-□S	24.5	29.5	-	10	36	5.5	5.5	M5x0.8	7	47	-	8
CQ2B25-□S	27.5	32.5	-	12	40	5.5	5.5	M6x1.0	12	52	-	10
CQ2B30-□S	28	33	-	16	45	7.5	7.5	M8x1.25	13	60	4.5	14
CQ2B40-□S	34.5	39.5	-	16	52	8	8	M8x1.25	13	69	5	14
CQ2B50-□S	-	40.5	50.5	20	64	10.5	10.5	M20x2.5	15	86	7	17

Model	L	M	ΦN	ΦO	P			Q		W	Z	K
					5st	10st	20st	5st	10st			
CQ2B12-□S	3.5	15.5	3.5	6.5 deep 3.5	M5x0.8		-	7.5	7.5	-	-	5
CQ2B16-□S	3.5	20	3.5	6.5 deep 3.5	M5x0.8		-	8	8	-	10	6
CQ2B20-□S	4.5	25.5	5.5	9 deep 7	M5x0.8		-	9	9	-	10	8
CQ2B25-□S	5	28	5.5	9 deep 7	M5x0.8		-	11	11	-	10	10
CQ2B30-□S	7	34	5.5	9 deep 7	M5x0.8	1/8	-	10.5	10.5	49.5	18	14
CQ2B40-□S	7	40	5.5	9 deep 7	1/8		-	11	11	57	18	14
CQ2B50-□S	8	50	6.6	11 deep 8	-	1/4		10.5	10.5	71	22	17

st=Stroke

外形尺寸/Overall Dimension

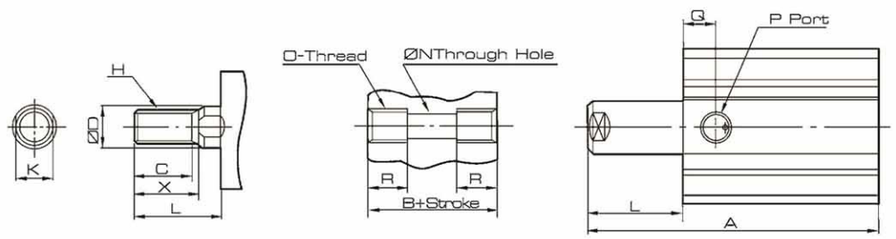

Dimension

Male Piston Rod Thread

Bore (mm)	C	X	ΦD	H	L	K
12	9	10.5	6	M5 x 0.8	14	5
16	10	12	8	M6 x 1.0	15.5	6
20	12	14	10	M8 x 1.25	18.5	8
25	15	17.5	12	M10 x 1.25	22.5	10
32	20.5	23.5	16	M14 x 1.5	28.5	14
40	20.5	23.5	16	M14 x 1.5	28.5	14
50	26	28.5	20	M18 x 1.5	33.5	17
63	26	28.5	20	M18 x 1.5	33.5	17
80	32.5	35.5	25	M22 x 1.5	43.5	22
100	32.5	35.5	30	M22 x 1.5	43.5	27

Both end Thread Hole

Bore (mm)	O	R
12	M4 x 0.7	7
16	M4 x 0.7	7
20	M6 x 1.0	10
25	M6 x 1.0	10
32	M6 x 1.0	10
40	M6 x 1.0	10
50	M18 x 1.25	14
63	M10 x 1.5	18
80	M12 x 1.75	22
100	M12 x 1.75	22

Single Acting, Sprung-out

Bore (mm)	A			L		
	5st	10st	20st	5st	10st	20st
12	30.5	40.5	-	8.5	13.5	-
16	32	32	-	8.5	13.5	-
20	34	34	-	9.5	14.5	-
25	37.5	37.5	-	10	15	-
32	40	50	-	12	17	-
40	46.5	56.5	-	12	17	-
50	-	58.5	78.5	-	18	28

* Unless Specified, the dimension of the type stroke length cylinder end two side cover talls cylinder are the same.

CE ISO9001

CJ2 Series Stainless Steel Mini-Cylinder

订购代号 / Ordering Code

C D J2 — B - 6 X 15 - R

Model	Installation Type	Bore x Stroke	Position of port on end cover
CJ2:without magnet ring CDJ2:with built-in magnet ring	B:basic type D:double earring (except 6mm bore) F:rod flange L:axial direction base type		Blank: vertical direction R:axial direction

Symbol:

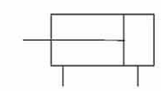

Stroke / Sensor Switch Model

* To choose proper sensor switch, please refer to stroke/ sensor switch chart.
Lead wire length code: Blank - 0.5 m, L - 3 m. Example: C73, C73L.
No additional accessary is required for sliding type of sensor switch installation.

Bore (mm)	Standard Stroke	Sensor Switch Code Tie-up Type Sensor Switch	Sensor Switch Code (Direct installation)	Channel installation type Sensor switch Not Suitable
6	15, 30, 45, 60	D-C73L D-H7A1L D-C76L DH7BL D-C80L	BJ2-006	D-A72L D-A73L D-A76L D-A80L D-F79L D-J79L
10	15, 30, 45, 60, 75, 100, 125, 150		BJ2-010	
16	15, 30, 45, 60, 75, 100, 125, 150, 175, 200		BJ2-016	

规格/Specification

Bore (mm)	6	10	32
Operation Fluid	Air		
Operation	Double Acting		
Min. Operation Pressure	1.05 MPa		
Max. Operation Pressure	0.7 MPa		
Ambient and fluid temp	5 ~ 60 ℃		
Cushion	Rubber Gasket Cushioning / Air Cushioning		
Rod Operation Speed	50 ~ 750 mm/s		
Tolerance Stroke	+1.0 mm 0 mm		
Lubricant	Non-lub		
Port Size	M5 x 0.8		

CQ2 Series Compact Cylinder

订购代号 / Ordering Code

C D Q2 - B - 20 X 30 - D - C

Model	Mounting	Bore	Stroke	Operation	Thread
CQ2:without magnet ring CDQ2:with built -in magnet ring	B:with through hole A:with female thread on both ends	12~100		D:double-action S:single-action spring return T:single-action spring-extend	Blank:female thread on piston rod M:male thread on piston rod R:rubber buffer *single action cylinder can't be provided with rubber buffer

Symbol:

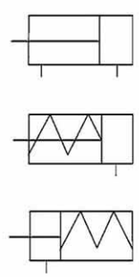

规格/Specification

Bore (mm)	12	16	20	25	32	40	50	63	80	100
Operating Fluid	Air									
Operation	Double Acting/ Single Acting: Sprung-in, Sprung-out									
Proof Pressure	1.5 MPa									
Max. Operating Pressure	1.0 MPa									
Ambient and Fluid Temperature	5℃ ~ 60 ℃									
Piston Rod Thread	Female thread (Standard), Male thread (Optional)									
Cushion	Non-lub									
Piston Acting Speed	50-500 mm/s									
Tolerance Stroke	+1.0 mm 0 mm									
Lubricant	Non-Lub									
Installation	Through Hole (Standard), Two side dove talls (Optional)									
Port Size	M5 x 0.8				1/8		1/4		3/8	

CE ISO9001

Stroke/Sensor Switch Model

Bore	Standard Stroke (mm)		*With Sensor
12.16	5 , 10 , 15 , 20 , 25 , 30	5.10	D-A72L D-A76L D-A73L D-A80L D-F78L D-J79L
20,25	5 , 10 , 15 , 20 , 25 , 30 , 35 , 40 , 45 , 50		
32,40	5, 10, 15, 20, 25, 30, 35, 40, 45, 50, 75, 100		
50	10, 15, 20, 25, 30, 35, 40, 45, 50, 75, 100	10.20	
63,80,100		-	

* To choose proper sensor switch, please refer to sensor switch pages. Lead wire length code as follow: Blank - 0.5m, L-3m, Z-5m Example: A72,A72L
* For slide installation.

外形尺寸/Overall Dimension

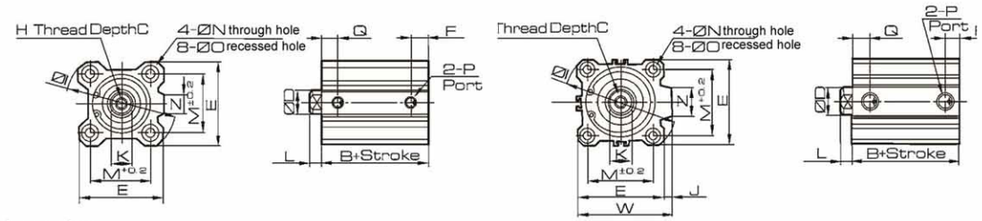

Dimension

Double Acting Cylinder

Model	Stroke Range (mm)	B	ΦD	E	F	H	C	ΦI	J
CQ2B12-□D	5~30	17	6	25	5	M3 x 0.5	6	32	-
CQ2B16-□D	5~30	18.5	8	29	5.5	M4 x 0.7	8	38	-
CQ2B20-□D	5~50	19.5	10	36	5.5	M5 x 0.8	7	47	-
CQ2B25-□D	5~50	22.5	12	40	5.5	M6 x 1.0	12	52	-
CQ2B32-□D	5 10~50	23	16	45	5.5 7.5	M8 x 1.25	13	60	4.5
CQ2B40-□D	5~50	29.5	16	52	8	M8 x 1.25	13	69	5
CQ2B50-□D	10~50	30.5	20	64	10.5	M10 x 1.5	15	86	7
CQ2B63-□D	10~50	36	20	77	10.5	M10 x 1.5	15	103	7
CQ2B80-□D	10~50	43.5	25	98	12.5	M16 x 2.0	21	132	6
CQ2B100-□D	10~50	53	30	117	13	M20 x 2.5	27	156	6.5

Model	K	L	M	ΦN	ΦO	P	Q	W	Z
CQ2B12-□D	5	3.5	15.5	3.5	6.5 deep 3.5	M5 x 0.8	7.5	-	-
CQ2B16-□D	6	3.5	20	3.5	6.5 deep 3.5	M5 x 0.8	8	-	10
CQ2B20-□D	8	4.5	25.5	5.5	9 deep 7	M5 x 0.8	9	-	10
CQ2B25-□D	10	5	28	5.5	9 deep 7	M5 x 0.8	11	-	10
CQ2B32-□D	14	7	34	5.5	9 deep 7	M5 x 0.8 1/8	11.5 10.5	49.5	18
CQ2B40-□D	14	7	40	5.5	9 deep 7	1/8	11	57	18
CQ2B50-□D	17	8	50	6.6	11 deep 8	1/4	10.5	71	22
CQ2B63-□D	17	8	60	9	14 deep 10.5	1/4	15	84	22
CQ2B80-□D	22	10	77	11	17.5 deep 13.5	3/8	16	104	26
CQ2B100-□D	27	12	94	11	17.5 deep 13.5	3/8	23	123.5	26

Stroke

Model	Stroke (mm)	B	F	P	Q
32	75,100	33	7.5	1/8	10.5
40	75,100	39.5	8	1/8	11
50	75,100	40.5	10.5	1/4	10.5
63	75,100	46	10.5	1/4	15
80	75,100	53.5	12.5	3/8	16
100	75,100	63	13	3/8	23

1. Standard stroke is classified every 5 mm.
2. 5, 10, 15 or 20 mm thick gaskets are applied on stroke from 55mm to 100mm (55, 60, 65, 70, 80, 85, 90, 95).
3. Unless specified, the dimension of 4 holes tapped with stroke length cylinder and two side cover talls cylinder are the same.

DSN Series Stainless Steel Mini-Cylinder
(conform to ISO6432 standard)

外形尺寸/Overall Dimension

DSN

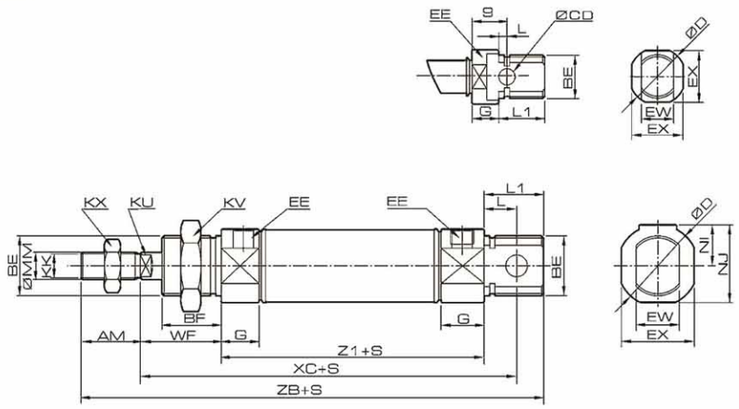

DSN-U

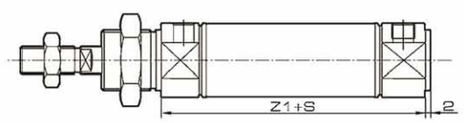

DSND

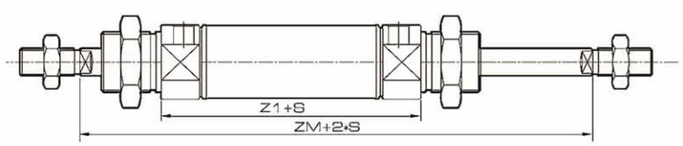

Bore Symbol	AM	BE	BF	CD	D	EE	EX	EW	G	KK	KU	KV	KX	L	L1	MM	NI	NJ	WF	XC	Z1	ZB	ZM
12	16	M16 x1.5	16	6	21	M5	19	12	10	M6 x1.0	5	24	12	4	16	6	-	-	22	75	51	105	95
16	16	M16 x1.5	16	6	21	M5	19	12	10	M6 x1.0	5	24	12	9	16	6	-	-	22	89	51	105	102
20	20	M22 x1.5	18	8	30	G1/8	27	16	15	M8 x1.25	7	27	14	12	22	8	15	28.5	24	95	59	125	107
25	22	M22 x1.5	20	8	30	G1/8	27	16	16	M10 x1.25	9	27	17	12	22	10	15	28.5	28	104	64	136	120
32	23	M27 x2.0	20	10	38	G1/8	35	20	16	M10 x1.25	10	35	17	15	27	12	19	36.5	28	115	72	150	128
40	23	M33 x2.0	20	10	45	G1/8	42	20	16	M14 x1.5	14	41	22	15	27	16	22.5	43.5	28	115	72	150	128

CE ISO9001

外形尺寸/Overall Dimension

FA, FB

FA、FB

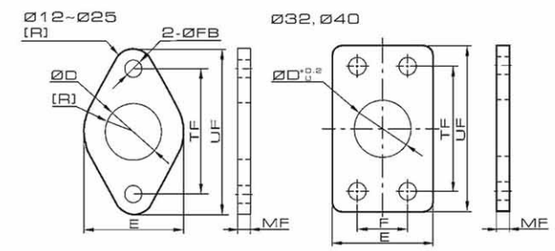

Bore/ Symbol	12	16	20	25	32	40
E	30	30	40	40	45	50
FB	6	6	7	7	7	9
MF	4	4	5	5	5	5
F	/	/	/	/	20	30
TF	40	40	50	50	60	80
UF	53	53	66	66	80	100
D	16.3	16.3	22.3	22.3	27.3	33.3

外形尺寸/Overall Dimension

LB Foot

LB

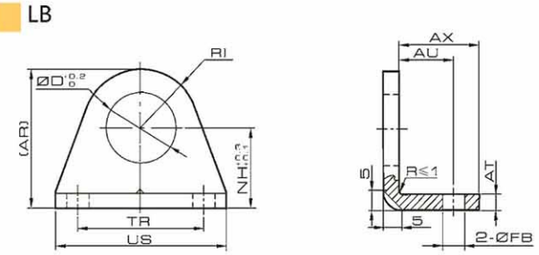

Bore/ Symbol	12	16	20	25	32	40
AT	4	4	5	5	5	5
AU	14	14	17	17	20	20
AX	20	20	25	25	30	30
FB	6	6	7	7	7	9
NH	20	20	25	25	35	40
TR	32	32	40	40	40	50
US	42	42	54	54	55	75
D	16.3	16.3	22.3	22.3	27.3	33.3
AR	32.5	32.5	42	42	56	64
RI	R12.5	R12.5	R17	R17	R21	R24

SDB Rear Hinge

外形尺寸/Overall Dimension

SDB

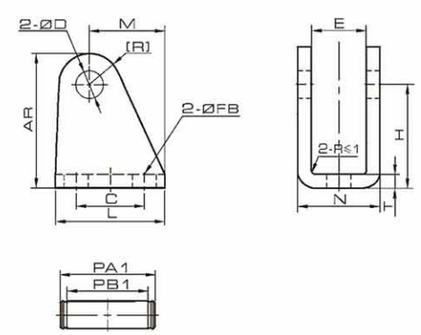

Bore/ Symbol	12	16	20	25	32	40
C	15	15	20	15	25	25
FB	6	6	7	7	7	9
H	27	27	30	30	40	40
L	25	25	32	32	40	40
M	18	18	22	22	27.5	27.5
N	18	18	25	25	28	28
E	12	12	16	16	20	20
T	3	3	4	4	4	4
D	6	6	8	8	10	10
AR	34	34	39	39	52	52

DSN Series Stainless Steel Mini-Cylinder
(conform to ISO6432 standard)

订购代号 / Ordering Code

DSN - U - 20 X 50 - 25 - LB

Model	Type	Bore	Stroke	Adjustable Stroke	Mounting
DSN:double action DSNS:single action spring-in DSNT:single action spring-out DSND:double-shaft double-action DSNJ:double-shaft with adjustable stroke	Blank:standard with eye mounting CM:round rear cover U:flat rear cover	16 20 25 32 40			Blank: basic mounting LB:front & rear mounting FA:front mounting flange FB:rear mounting flange SDB:rear hinge

规格/Specification

Bore (mm)	12	16	20	25	32	40
Operation	Double Acting or Single Acting					
Working Medium	Air					
Mountings	Basic LB FA SDB					
Operating Voltage Range	1 ~ 9.0 Kgf/cm²					
Proof Pressure	13.5 Kgf/cm²					
Operating Temperature Range	0 ~ 70 ℃					
Operating Speed Range	50 ~ 800 mm/s					
Cushion	Gasket Cushioning	Adjustable Cushioning				
Port Size	M5 x 0.8		G 1/8"			

CE ISO9001

Stroke

Bore	Standard Stroke	Max. Stroke	Allowable Stroke
12	25 50 75 80 100 125 150 160 175 200	300	500
16	25 50 75 80 100 125 150 160 175 200	300	500
20	25 50 75 80 100 125 150 160 175 200 250 300	500	650
25	25 50 75 80 100 125 150 160 175 200 250 300 350 400 450 500	500	650
32	25 50 75 80 100 125 150 160 175 200 250 300 350 400 450 500	500	650
40	25 50 75 80 100 125 150 160 175 200 250 300 350 400 450 500	500	650

Internal Structure

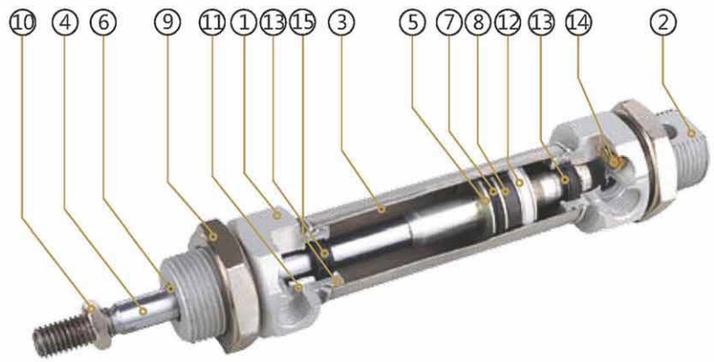

Parts

Number	Name	Material	Quantity
1	Front Cover	Hard Anodised Aluminium	1
2	Back Cover	Hard Anodised Aluminium	1
3	Barrel	Stainless Steel	1
4	Piston Rod	Chromed Carbon Steel	1
5	Piston	Aluminium	1
6	Piston Rod Seal	NBR	1
7	Piston Seal	NBR	1
8	Magnet	Plastic	1
9	Front and Rear Cover	Carbon Steel	1
10	Piston Rod Screw	Carbon Steel	1
11	Bearing	Non-lub Bearing	1
12	Anti-frintion Ring	PTFE	1
13	Cushioning Seal	NBR	2
14	Cushioning Adjusting Screw	Brass	2
15	Cover Seal	NBR	2

外形尺寸/Overall Dimension

TN

Ø16~Ø25

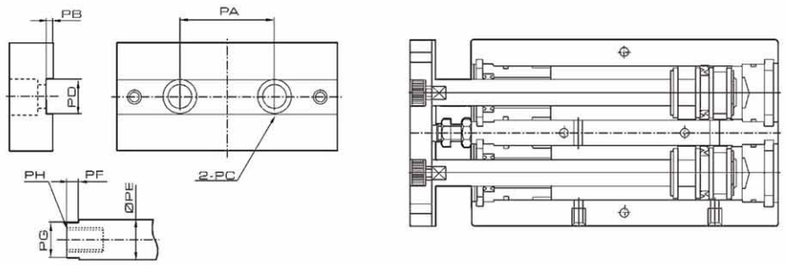

Dimension

Bore / Symbol	PA	PB	P1	PD	PE	PF	PG	P2
10	18	0.5	Φ6.2 deep 3.5 mm, Through Hole: Φ4.5	5.2	6	3	5.2	M3 × 0.5 deep 5 mm
16	24	1	Φ7.8 deep 4.6 mm, Through Hole: Φ4.5	6.2	8	3	6.2	M4 × 0.7 deep 46 mm
20	28	1	Φ11 deep 6.8 mm, Through Hole: Φ4.5	8.2	10	3	8.2	M6 × 1 deep 48 mm
25	34	1	Φ11 deep 6.8 mm, Through Hole: Φ4.5	10.2	12	3	10.2	M6 × 1 deep 48 mm
32	42	2	Φ17 deep 12 mm, Through Hole: Φ4.5	14	16	3	14	M10 × 1.5 deep 14 mm

外形尺寸/Overall Dimension

Allowable size load

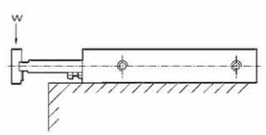

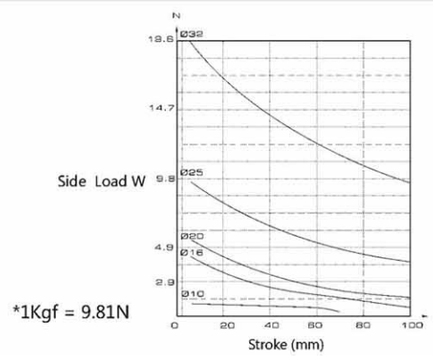

*1Kgf = 9.81N

Dimension O-Ring list

Inner Diameter Quantity	Front cover seal	Piston O-ring	Rear cover O-ring	Piston rod O-ring
	1	2	2	1
10	PDU-6	APA-10	10×1.5	P12
16	PDU-8	APA-16	16×1.5	P16
20	PDU-10	APA-20	20×1.5	P20
25	PDU-12	APA-25	25×1.5	P20
32	PDU-16	APA-32	32×1.5	P25

CE ISO9001

外形尺寸/Overall Dimension

TN

Ø10

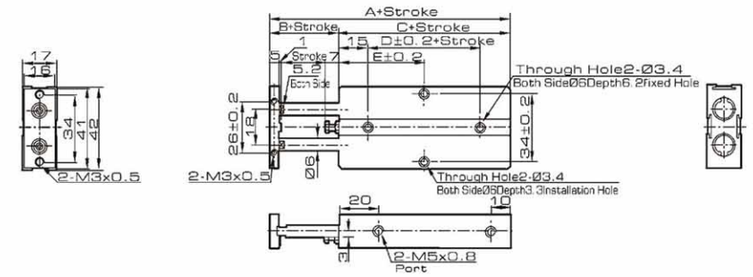

Ø16~Ø25

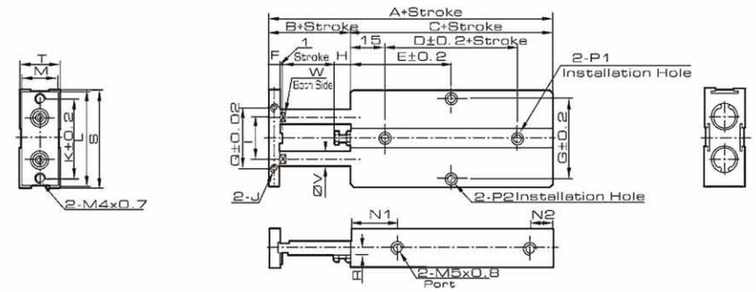

Ø32

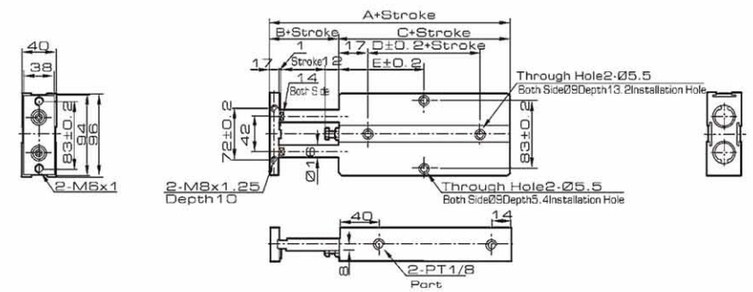

Bore Symbol	A	B	C	D	E												F	G	H	I
					10	20	30	40	50	60	70	80	90	100	125	150				
16	68	15	53	20	30	35	40	45	50	55	60	65	70	75	87.5	100	8	47	6	24
20	78	20	58	20	35	35	40	45	50	55	60	65	70	75	87.5	100	10	55	9	28
25	81	19	62	30	40	40	45	50	55	60	65	70	75	80	92.5	105	10	66	8	34

Bore Symbol	J	K	L	M	N1	N2	P1	P2	Q	R	S	T	V	W
16	M4×0.7 deep 5	47	53	20	22	10	Double side: Φ7.5 Deep: 7.2 mm, Through Hole: Φ4.5	Double side: Φ8 Deep: 4.4 mm, Through Hole: Φ4.5	34	3	54	21	8	6.2
20	M4×0.7 deep 5	55	61	24	25	12	Double side: Φ7.5 Deep: 7.2 mm, Through Hole: Φ4.5	Double side: Φ8 Deep: 4.4 mm, Through Hole: Φ4.5	44	3.5	62	25	10	8.1
25	M4×0.8 deep 6	66	72	27	30	12	Double side: Φ7.5 Deep: 7.2 mm, Through Hole: Φ4.5	Double side: Φ8 Deep: 4.4 mm, Through Hole: Φ4.5	56	7	73	30	12	10.2

Bore Symbol	A	B	C	D	E											
					10	20	30	40	50	60	70					
10	63	12	51	10	30	30	35	40	45	50	55					
32	108	30	78	35	10	20	30	40	50	60	70	80	90	100	125	150
					45	50	55	60	65	70	75	80	85	90	102.5	115

CJP Series Needle Cylinder

订购代号 / Ordering Code

CJP B 6 X 10 - B

Model	Mounting Type	Bore X	Stroke -	Thread
CJP	B:plate mounting type(two nuts) S:inside-hiding type(one nut)	6:6mm 10:10mm 15:15mm	5 10 15	Blank:with thread on piston rod B:no thread on piston rod

规格/Specification

Bore	6	10	15
Stroke	5、10、15		
Port Size	M5X0.8		
Action	单动押回型/Single Action Spring Return		
Working Medium	空气/Air		
Max. Pressure	10.5Kgf/cm²		
Working Pressure	2~7 Kgf/cm²		
Working Temperature	0~60℃		
Lubrication	不需要/Not Repuired		
Cushion	-		

尺寸表/Dimension Sheet

CJPB TYPE

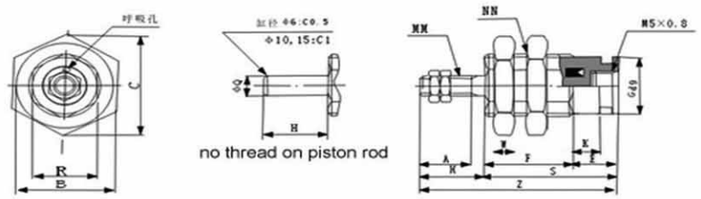

St:气缸行程(毫米)

Bore(mm)	A	B	C	E	F 5st	F 10st	F 15st	ΦG	H	K	MM	NN	R	S 5st	S 10st	S 15st	W	Z 5st	Z 10st	Z 15st	Q
6	7	12	13.9	6	12.5	19.5	26.5	8.5	9	3.5	M3×0.5	M10×1.0	9	18.5	22.5	32.5	3	27.5	34.5	41.5	3
10	10	19	22	6	14.5	21	28	12	12	3.5	M4×0.7	M15×1.5	13	20.5	27	34	4	32.5	39	46	5
15	12	27	31	7	16.5	22.5	29	19	14	4.2	M5×0.8	M22×1.5	20	23.5	29.5	36	5	37.5	43.5	50	6

CJPS TYPE

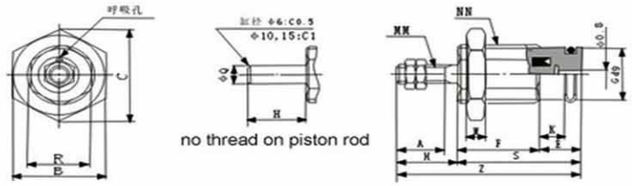

St:气缸行程(毫米)

Bore(mm)	A	B	C	E	F 5st	F 10st	F 15st	ΦG	H	K	MM	NN	R	S 5st	S 10st	S 15st	W	Z 5st	Z 10st	Z 15st	Q
6	7	12	13.9	6	12.5	19.5	26.5	8.5	9	3.5	M3×0.5	M10×1.0	9	18.5	22.5	32.5	3	27.5	34.5	41.5	3
10	10	19	22	6	14.5	21	28	12	12	3.5	M4×0.7	M15×1.5	13	20.5	27	34	4	32.5	39	46	5
15	12	27	31	7	16.5	22.5	29	19	14	4.2	M5×0.8	M22×1.5	20	23.5	29.5	36	5	37.5	43.5	50	6

CE ISO9001

TN Series Double-Rod Cylinder

TN25×30

TN20X25

订购代号 / Ordering Code

TN - 20 X 50 - S

Model	Bore	Stroke	Magnet
TN:double-shaft double-action cylinder	10 16 20 25 32		Blank: without magnet S: with magnet

Symbol

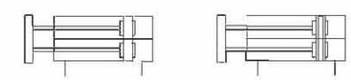

规格/Specification

Bore (mm)	10	16	20	25	32
Working Medium	Air				
Operation	Double Acting				
Operation Pressure Range	0.1~0.9 MPa				
Ensure Pressure Resistance	1.35 MPa				
Operation Temperature Range	0~70 ℃				
Operation Speed Range	100~500 mm/s				
Adjustable Stroke	-10~0 mm				
Cushion	Not Available	Cushioning Gasket			
Presion Of Non-rotating	0.4°	0.3°			
Port Size	M5 x 0.8				PT 1/8"

The Max. operating pressure is subject to the Max. load of hydralic buffer.

行程/Stroke

Bore (mm)	Standard Stroke	Max. Stroke	Allowable Stroke
10	10 20 30 40 50 60 70	70	100
16	10 20 30 40 50 60 70 80 90 100 125 150	150	200
20	10 20 30 40 50 60 70 80 90 100 125 150	150	200
25	10 20 30 40 50 60 70 80 90 100 125 150	150	200
32	10 20 30 40 50 60 70 80 90 100 125 150	150	200

MA & MAL Series Cylinder Mounting Accessory

外形尺寸/Overall Dimension

TYPE: FA

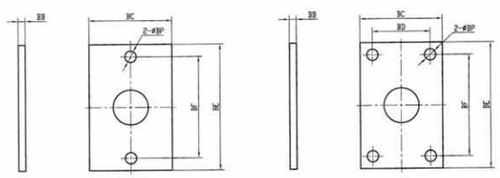

Symbol /Bore	16	20	25	32	40
BB	3	4	4	4	4
BC	26	38	38	47	50
BD	-	-	-	33	36
BE	52	64	64	72	84
BF	40	50	50	58	70
BP	5.5	6.5	6.5	6.5	6.5

TYPE: LB

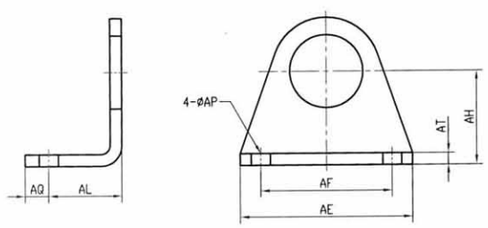

Symbol /Bore	16	20	25	32	40
AE	44	54	54	59	64
AF	32	40	40	45	50
AH	20	25	25	32	36
AL	13	15	15	25	25
AP	5.5	6.5	6.5	6.5	6.5
AQ	6	8	8	8	8
AT	3	3	3	3	3

TYPE: SDB

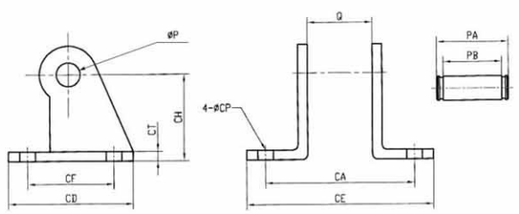

Symbol /Bore	16	20	25	32	40
CA	44	54	54	41	52
CD	36	48	48	52	56
CE	56	67	67	67	67
CF	24	32	32	36	40
CH	25	32	32	36	40
CT	3	3	3	3	3
CP	5.5	6.5	6.5	6.5	6.5
Q	12	16	16	16	20
PA	21	27	27	30	34
PB	17	22.5	22.5	24.5	28.5
ΦP	6	8	8	10	12

LYD-21

BK-81

Sensor & Metal Band

CE ISO9001

LQB Series Sealing Stretch Cylinder

订购代号 / Ordering Code

LQ B 100 x 55 - 50x400 - F

封口缸 Enclosing Cylinder

拉伸缸 Stretching Cylinder

Series	A: Non - cushion B: Adjustable Cushion	Cylinder Bore	Stroke	Cylinder Bore	Stroke	Adjustable Stroke

外形尺寸/Overall Dimension

TYPE: LQB63X47-40X360

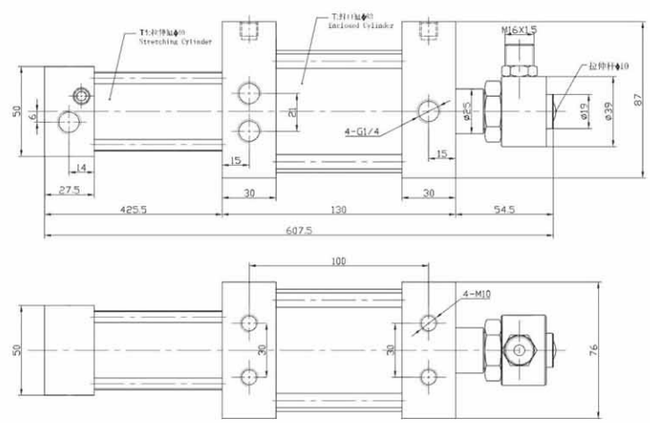

外形尺寸/Overall Dimension

TYPE: MSAL单动型 MSAL Single Action

TYPE: 基本型 Basic Type

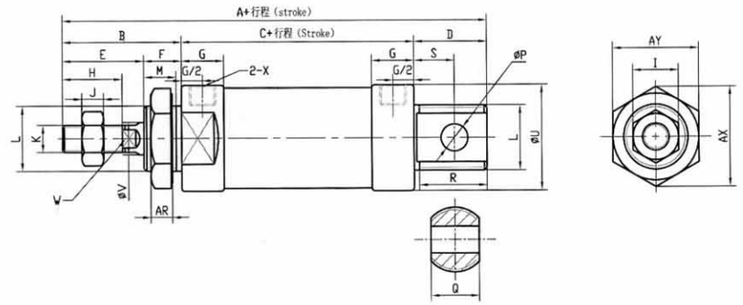

TYPE: 圆尾型 Round-End Type

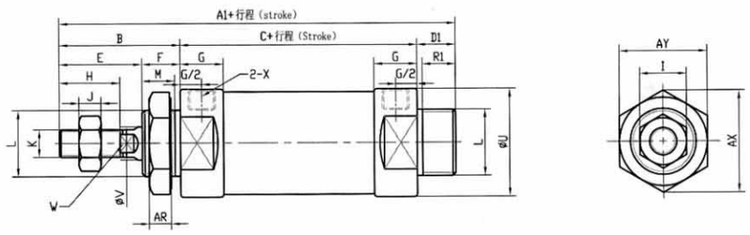

TYPE: 平尾型 Flat-End Type

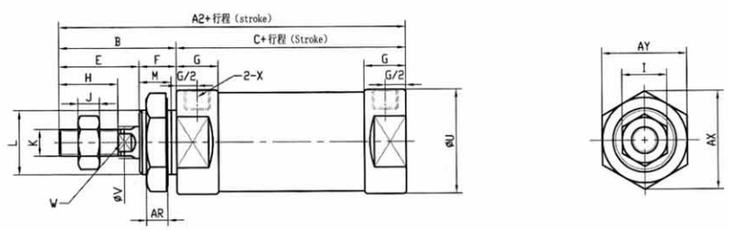

尺寸表/Dimension Sheet

Bore	A		A1		A2		B	C		D	D1	E	F	G	H	I	J
	0-50	50-100	0-50	50-100	0-50	50-100		0-50	50-100								
20	131	156	124	147	110	135	40	70	95	21	14	28	12	16	20	12	6
25	135	160	128	153	114	139	44	70	95	21	14	30	14	16	22	17	6
32	141	166	128	153	114	139	44	70	95	27	14	30	14	16	22	17	6
40	165	190	152	177	138	163	46	92	117	27	14	32	14	22	24	17	7

Bore	K	L	M	P	Q	R	R1	S	U	V	W	X	AR	AX	AY
20	M8×1.25	M22×1.5	10	8	16	19	12	12	30	8	6	G1/8	7	33	29
25	M10×1.25	M22×1.5	12	8	16	19	12	12	34	10	8	G1/8	7	33	29
32	M10×1.25	M24×2.0	12	10	16	25	12	15	39	12	10	G1/8	8	37	32
40	M10×1.25	M30×2.0	12	12	20	25	12	15	49	16	14	G1/4	9	47	41

CE ISO9001

外形尺寸/Overall Dimension

TYPE: MAL双轴型 MAL Double-shaft

TYPE: MALD

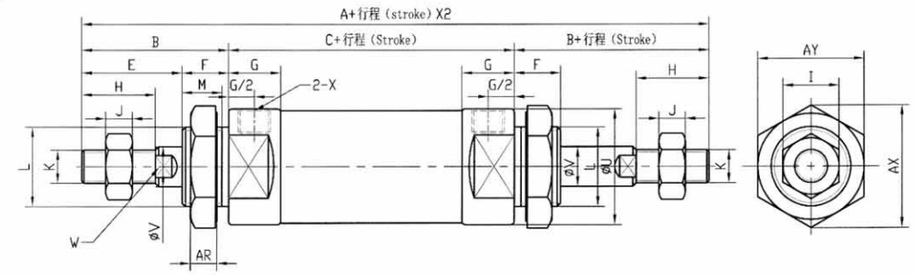

TYPE: MALJ

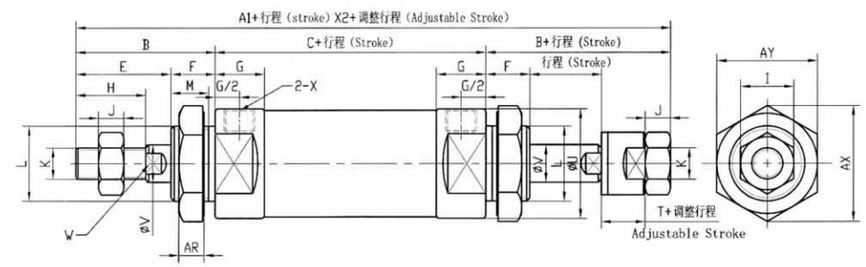

尺寸表/Dimension Sheet

Bore	A	A1	B	C	E	F	G	H	I	J	K
20	150	147	40	70	28	12	16	20	12	6	M8×1.25
25	158	155	44	70	30	14	16	22	17	6	M10×1.25
32	158	155	44	70	30	14	16	22	17	6	M10×1.25
40	184	180	46	92	32	14	22	24	17	7	M12×1.25

Bore	L	M	T	U	V	W	X	AR	AX	AY
20	M22×1.5	10	19	30	8	6	G1/8	7	33	29
25	M22×1.5	12	21	34	10	8	G1/8	7	33	29
32	M24×2.0	12	21	39	12	10	G1/8	8	37	32
40	M30×2.0	12	21	49	16	14	G1/4	9	47	41

规格/Specification

Bore	16	20	25	32	40
Action	Double Action for MAL,MALD,MALJ; Single Action for MSAL, MTAL				
Working Medium	Air				
Fixed Type	Basic Type FA Type LB Type SDB Type				
Working Pressure	1-9Kgf/cm^2				
Proof Pressure	13.5Kgf/cm^2				
Working Temperature	0-70 °C				
Operating Speed Range	50-800mm/s				
Cushion Type	Gasket cushion / Air cushion(Adjustable cushion)				
Port Size	M5×0.8	G1/8			

气缸理论出力表/ Cylinder Theory Output Sheet

Bore		16			20			25			32			40		
External Diameter of Piston Rod																
动作型式 Action Type		押出单动 Singleaction	复动型 Double Action 押侧 Extrusion Side	复动型 Double Action 拉侧 Pull Side	押出单动 Singleaction	复动型 Double Action 押侧 Extrusion Side	复动型 Double Action 拉侧 Pull Side	押出单动 Singleaction	复动型 Double Action 押侧 Extrusion Side	复动型 Double Action 拉侧 Pull Side	押出单动 Singleaction	复动型 Double Action 押侧 Extrusion Side	复动型 Double Action 拉侧 Pull Side	押出单动 Singleaction	复动型 Double Action 押侧 Extrusion Side	复动型 Double Action 拉侧 Pull Side
受压面积 cm^2 Compression Area		2.01	2.01	1.81	3.14	3.14	2.64	4.9	4.9	4.12	8.04	8.04	6.90	12.56	12.56	10.55
空气压力 Air Pressure (Kgf/cm^2)	1	-	2.01	1.81	-	3.14	2.64	-	4.90	4.12	-	8.04	6.90	-	12.56	10.55
	2	-	4.02	3.62	1.57	6.28	5.28	2.45	9.80	8.24	4.02	16.08	13.80	6.28	25.12	21.10
	3	2.01	6.03	5.43	4.71	9.42	7.92	7.35	14.70	12.36	12.06	24.12	20.70	18.84	37.68	31.65
	4	4.02	8.04	7.24	7.85	12.56	10.56	12.25	19.60	16.48	20.10	32.16	27.16	31.40	50.24	42.20
	5	6.03	10.05	9.05	10.99	15.70	13.20	17.15	24.50	20.60	28.14	40.20	34.50	43.96	62.80	52.75
	6	8.04	12.06	10.86	14.13	18.84	15.84	22.05	29.40	24.72	36.18	48.24	41.40	56.52	75.36	63.30
	7	10.04	14.07	12.67	17.27	21.98	18.48	26.95	34.30	28.84	44.22	56.28	48.30	69.08	87.92	73.85
	8	-	-	-	20.41	25.12	21.12	31.85	39.20	32.96	52.26	64.32	55.20	81.64	100.48	84.40
	9	-	-	-	23.55	28.26	23.76	36.75	44.10	37.08	60.30	72.36	62.10	94.20	113.04	94.95

行程/Stroke

Bore	Standard Stroke														Max. Stroke	Allowable Stroke
16	25	50	75	100	125	150	175	200							300	500
20	25	50	75	100	125	150	175	200	250	300					500	650
25	25	50	75	100	125	150	175	200	250	300	350	400	450	500	500	650
32	25	50	75	100	125	150	175	200	250	300	350	400	450	500	500	650
40	25	50	75	100	125	150	175	200	250	300	350	400	450	500	500	650

CE ISO9001

外形尺寸/Overall Dimension

TYPE: MAL复动型 MAL Double Action

TYPE: 基本型
Basic type

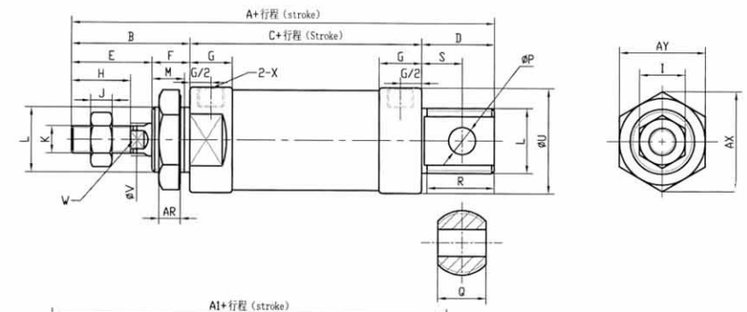

TYPE: 圆尾型
Round-End Type

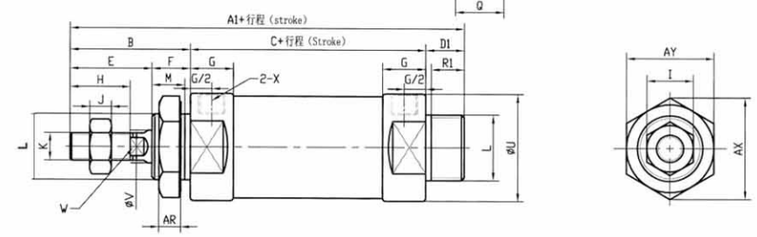

TYPE:平尾型
Flat-End Type

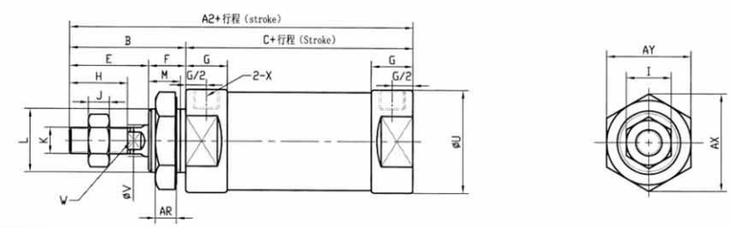

尺寸表/Dimension Sheet

Bore	A	A1	A2	B	C	D	D1	E	F	G	H	I	J	K
16	114	108	98	38	60	16	10	22	16	10	16	10	5	M6×1
20	131	124	110	40	70	21	14	28	12	16	20	12	6	M8×1.25
25	135	128	114	44	70	21	14	30	14	16	22	17	6	M10×1.25
32	141	128	114	44	70	27	14	30	14	16	22	17	6	M10×1.25
40	163	150	136	46	90	27	14	32	14	22	24	17	7	M12×1.25

Bore	L	M	P	Q	R	R1	S	U	V	W	X	AR	AX	AY
16	M16×1.5	14	6	12	14	9	9	23	6	5	M5	6	25	22
20	M22×1.5	10	8	16	19	12	12	30	8	6	G1/8	7	33	29
25	M22×1.5	12	8	16	19	12	12	34	10	8	G1/8	7	33	29
32	M24×2.0	12	10	16	25	12	15	39	12	10	G1/8	8	37	32
40	M30×2.0	12	12	20	25	12	15	49	16	14	G1/4	9	47	41

外形尺寸/Overall Dimension

TYPE: MSA Single Action

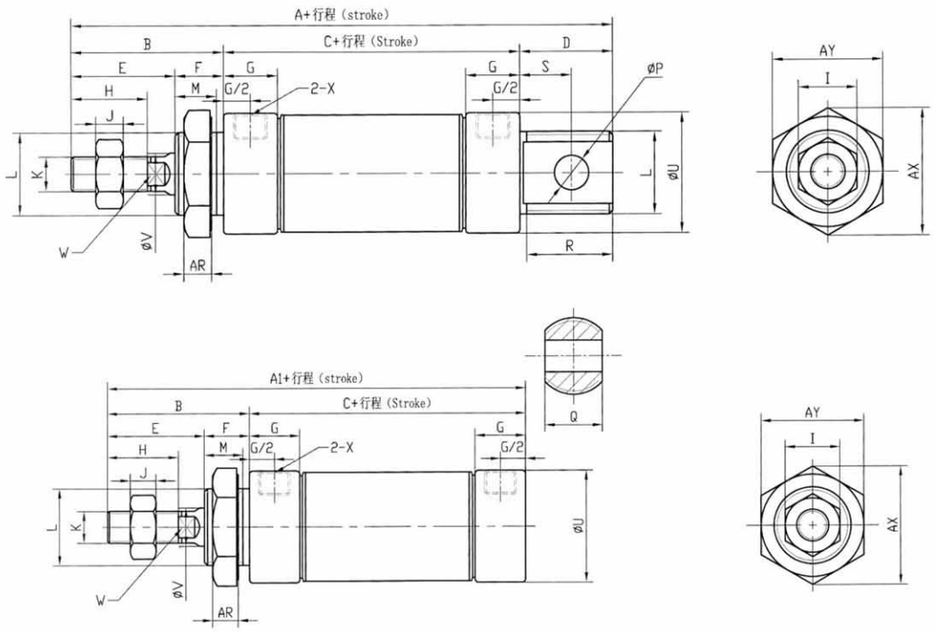

尺寸表/Dimension Sheet

Bore	A		A1		B	C		D	E	F	G	H	I	J	K
	0-50	51-100	0-50	51-100		0-50	51-100								
16	114	139	98	123	38	60	85	16	22	16	10	16	10	5	M6×1
20	137	162	116	141	40	76	101	21	28	12	16	20	12	6	M8×1.25
25	141	166	120	145	44	76	101	21	30	14	16	22	17	6	M10×1.25
32	147	172	120	145	44	76	101	27	30	14	16	22	17	6	M10×1.25
40	149	174	122	147	46	76	101	27	32	14	16.7	24	17	7	M12×1.25

Bore	L	M	P	Q	R	S	U	V	W	X	AR	AX	AY
16	M16×1.5	14	6	12	14	9	21	6	5	M5	6	25	22
20	M22×1.5	10	8	16	19	12	27	8	6	G1/8	7	33	29
25	M22×1.5	12	8	16	19	12	30	10	8	G1/8	7	33	29
32	M24×2.0	12	10	16	25	15	35	12	10	G1/8	8	37	32
40	M30×2.0	12	12	20	25	15	41.8	16	14	G1/8	9	47	41

CE ISO9001

MAL Series Aluminium Mini-Cylinder

(ISO6432 Standard)

订购代号 / Ordering Code

MAL C - U 25 X 50 - 25 - S - FA

Model	Cushion Type	Back Cover	Bore X Stroke	Adjustable Stroke	Magnet	Fixed Type
MAL: double action MSAL: single action spring extend MTAL: single action spring return MALD: double-shaft double-action MALJ: double-shaft & double-action & adjustable stroke type	Blank: standard type (gasket cushion) C: adjustable cushion (air cushion)	Blank: basic type (Pivot type) U: flat-end type CM: round-end type		MALJ	Blank: without magnet S: with magnet	Blank: basic type LB: front and rear bracket FA: front mounting flange SDB: back cover swiveling type

规格/Specification

Bore	16	20	25	32	40
Action	Double Action for MA,MAD, MAJ; Single action for MSA, MTA				
Working Medium	Air				
Fixed Type	Basic Type FA Type LB Type SDB Type				
Working Pressure	1-9Kgf/cm^2				
Proof Pressure	13.5Kgf/cm^2				
Working Temperature	0-70 °C				
Operating Speed Range	50-800mm/s				
Cushion Type	Gasket cushion / Air cushion(Adjustable cushion)				
Port Size	M5×0.8	G1/8			

气缸理论出力表/Cylinder Theory Output Sheet

Bore		16			20			25			32			40		
动作型式 Action Type		押出单动 Singleaction	复动型 Double Action 押侧 Extrusion Side	复动型 Double Action 拉侧 Pull Side	押出单动 Singleaction	复动型 Double Action 押侧 Extrusion Side	复动型 Double Action 拉侧 Pull Side	押出单动 Singleaction	复动型 Double Action 押侧 Extrusion Side	复动型 Double Action 拉侧 Pull Side	押出单动 Singleaction	复动型 Double Action 押侧 Extrusion Side	复动型 Double Action 拉侧 Pull Side	押出单动 Singleaction	复动型 Double Action 押侧 Extrusion Side	复动型 Double Action 拉侧 Pull Side
受压面积 Compression Area cm^2		2.01	2.01	1.81	3.14	3.14	2.64	4.9	4.9	4.12	8.04	8.04	6.90	12.56	12.56	10.55
空气压力 Air Pressure (Kgf/cm^2)	1	-	2.01	1.81	-	3.14	2.64	-	4.90	4.12	-	8.04	6.90	-	12.56	10.55
	2	-	4.02	3.62	1.57	6.28	5.28	2.45	9.80	8.24	4.02	16.08	13.80	6.28	25.12	21.10
	3	2.01	6.03	5.43	4.71	9.42	7.92	7.35	14.70	12.36	12.06	24.12	20.70	18.84	37.68	31.65
	4	4.02	8.04	7.24	7.85	12.56	10.56	12.25	19.60	16.48	20.10	32.16	27.16	31.40	50.24	42.20
	5	6.03	10.05	9.05	10.99	15.70	13.20	17.15	24.50	20.60	28.14	40.20	34.50	43.96	62.80	52.75
	6	8.04	12.06	10.86	14.13	18.84	15.84	22.05	29.40	24.72	36.18	48.24	41.40	56.52	75.36	63.30
	7	10.04	14.07	12.67	17.27	21.98	18.48	26.95	34.30	28.84	44.22	56.28	48.30	69.08	87.92	73.85
	8	-	-	-	20.41	25.12	21.12	31.85	39.20	32.96	52.26	64.32	55.20	81.64	100.48	84.40
	9	-	-	-	23.55	28.26	23.76	36.75	44.10	37.08	60.30	72.36	62.10	94.20	113.04	94.95

行程/Stroke

Bore	Standard Stroke	Max. Stroke	Allowable Stroke
16	25 50 75 100 125 150 175 200	300	500
20	25 50 75 100 125 150 175 200 250 300	500	650
25	25 50 75 100 125 150 175 200 250 300 350 400 450 500	500	650
32	25 50 75 100 125 150 175 200 250 300 350 400 450 500	500	650
40	25 50 75 100 125 150 175 200 250 300 350 400 450 500	500	650

CE ISO9001

尺寸表/Dimension Sheet

TYPE: MA复动型 MA Double Action

TYPE: 基本型
Basic Type

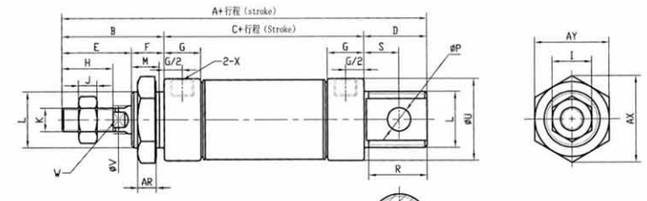

TYPE: 平尾型
Flat-End Type

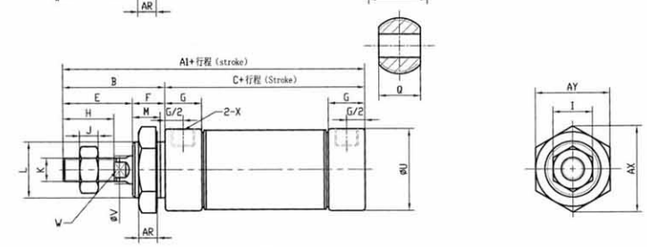

TYPE: 双轴型
Double-Shaft Type

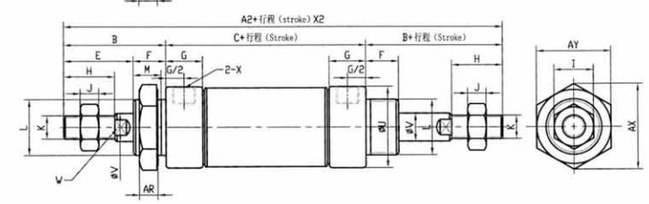

TYPE: 双轴可调型
Double-shaft &
Adjustable stroke type

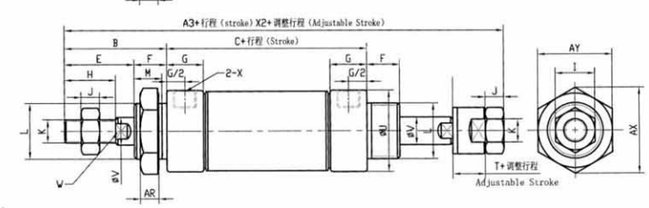

尺寸表/Dimension Sheet

Bore	A	A1	A2	A3	B	C	D	E	F	G	H	I	J	K
16	114	98	136	135	38	60	16	22	16	10	16	10	5	M6×1
20	137	116	156	153	40	76	21	28	12	16	20	12	6	M8×1.25
25	141	120	164	161	44	76	21	30	14	16	22	17	6	M10×1.25
32	147	120	164	161	44	76	27	30	14	16	22	17	6	M10×1.25
40	149	122	168	164	46	76	27	32	14	16.7	24	17	7	M12×1.25

Bore	L	M	P	Q	R	S	U	V	W	X	AR	AX	AY
16	M16×1.5	14	6	12	14	9	21	6	5	M5	6	25	22
20	M22×1.5	10	8	16	19	12	27	8	6	G1/8	7	33	29
25	M22×1.5	12	8	16	19	12	30	10	8	G1/8	7	33	29
32	M24×2.0	12	10	16	25	15	35	12	10	G1/8	8	37	32
40	M30×2.0	12	12	20	25	15	41.8	16	14	G1/8	9	47	41

CE ISO9001

外形尺寸/Overall Dimension

TYPE: 外牙尺寸/Overall Cog Dimension

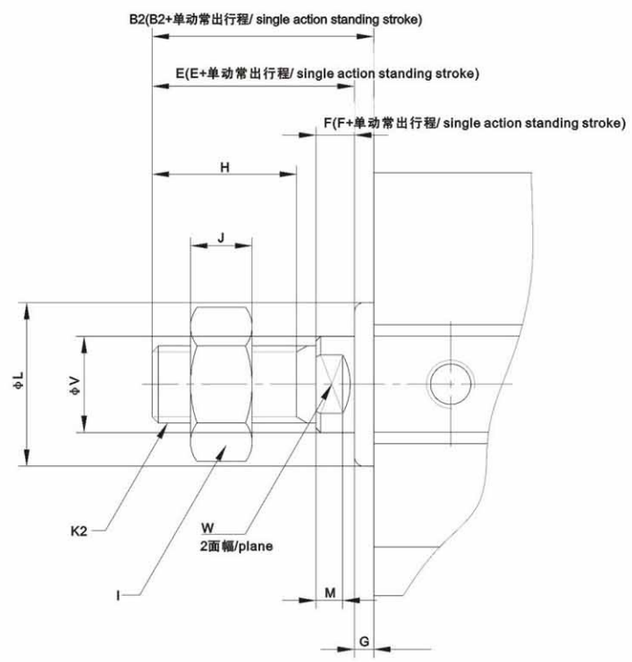

尺寸表/Dimension Sheet

Bore	B2	E	F	G	H	I	J	K2	L	M	V	W
12	17	16	4	1	10	8	4	M5×0.8	10.2	2.8	6	5
16	17.5	16	4	1.5	10	8	4	M5×0.8	11	2.8	6	5
20	20.5	19	4	1.5	13	10	5	M6×1	15	2.8	8	6
25	23	21	4	2	15	12	6	M8×1.25	17	2.8	10	8
32	25	22	4	3	15	17	6	M10×1.25	22	2.8	12	10
40	35	32	4	3	25	19	8	M14×1.5	28	2.8	16	14
50	37	33	5	4	25	27	11	M18×1.5	38	2.8	20	17
63	37	33	5	4	25	27	11	M18×1.5	40	2.8	20	17
80	44	39	6	5	30	32	13	M22×1.5	45	4	25	22
100	50	45	7	5	35	36	13	M26×1.5	55	4	32	27

MA Series Stainless Steel Mini-Cylinder
(ISO6432 Standard)

订购代号 / Ordering Code

MA C - U 25 X 50 - 25 - S - FA

Model	Cushion Type	Back Cover	Bore X Stroke	Adjustable Stroke	Magnet	Fixed Type
MA: double action MSA: single action spring extend MTA: single action spring return MAD: double-shaft double-action MAJ: double-shaft & double-action & adjustable stroke type	Blank: standard type (gasket cushion) C: adjustable cushion (air cushion)	Blank: basic type (Pivot type) U: flat-end type CM: round-end type		MAJ	Blank: without magnet S: with magnet	Blank: basic type LB: front and rear bracket FA: front mounting flange SDB: back cover swiveling type

MA cylinder is ISO6432 standard. Barrel is made from stainless steel. Normal piston rod is steel S45, stainless steel piston rod is optional. With aluminium cover. The end caps are rolled together with the tube. Using self-lubricating bearing, the piston rod is lubrication free. The normal bore is from 16mm to 40mm, for special size is available.

CNC machined, we will do full test before shipment to control the quality.

外形尺寸/Overall Dimension

TYPE: SSA、SSAS、STA、STAS

TYPE:
ϕ12～ϕ16

TYPE:
ϕ20～ϕ100

TYPE:STA、STAS

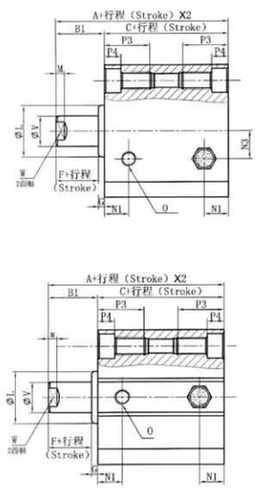

TYPE:SSA、SSAS

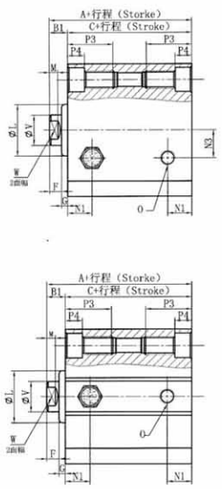

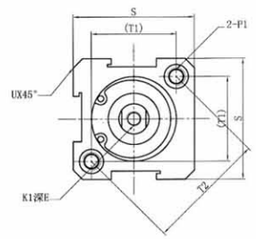

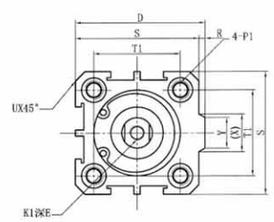

尺寸表/Dimension Sheet

Type / Bore	Standard Type A ≤10	Standard Type A >10	Standard Type B1	Standard Type C ≤10	Standard Type C >10	With Magnet A ≤10	With Magnet A >10	With Magnet B1	With Magnet C ≤10	With Magnet C >10	D	E	F	G	K1	L	M	M1	L3
12	32	42	5	27	37	42	52	5	37	47	-	6	4	1	M3×0.5	10.2	2.8	6.3	6
16	34	44	5.5	28.5	38.5	44	54	5.5	38.5	48.5	-	6	4	1.5	M3×0.5	11	2.8	7.3	6.5
20	35	45	5.5	29.5	39.5	45	55	5.5	39.5	49.5	36	8	4	1.5	M4×0.7	15	2.8	7.5	-
25	37	47	6	31	41	47	57	6	41	51	42	10	4	2	M5×0.8	17	2.8	8	-
32	41.5	51.5	7	34.5	44.5	51.5	61.5	7	44.5	54.5	50	12	4	3	M6×1	22	2.8	9	-
40	43	53	7	36	46	53	63	7	46	56	58.5	12	4	3	M8×1.25	28	2.8	10	-

Bore	O	P1 double side	P1 Cog	P1 through hole	P3	P4	R	S	T1	T2	U	V	W	X	Y
12	M5×0.8	ϕ6.5	M5×0.8	ϕ4.2	12	4.5	-	25	16.2	23	1.6	6	5	-	-
16	M5×0.8	ϕ6.5	M5×0.8	ϕ4.2	12	4.5	-	29	19.8	28	1.6	6	5	-	-
20	M5×0.8	ϕ6.5	M5×0.8	ϕ4.2	14	4.5	2	34	24	-	2.1	8	6	11.3	10
25	M5×0.8	ϕ8.2	M6×1	ϕ4.6	15	5.5	2	40	28	-	3.1	10	8	12	10
32	G1/8	ϕ8.2	M6×1	ϕ4.6	16	5.5	6	44	34	-	2.2	12	10	18.3	15
40	G1/8	ϕ10	M8×1.25	ϕ6.5	20	7.5	6.5	52	40	-	2.3	16	14	21.3	16

CE ISO9001

外形尺寸/Overall Dimension

TYPE: SDAD、SDADS、SDAJ、SDAJS

TYPE:
ϕ12～ϕ16

TYPE:
ϕ20～ϕ100

TYPE:SDAD、SDADS

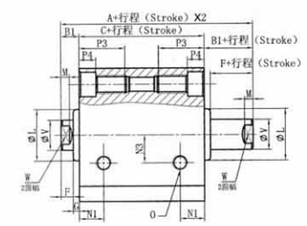

TYPE:SDAJ、SDAJS

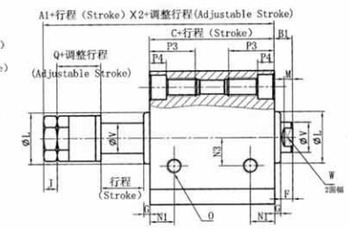

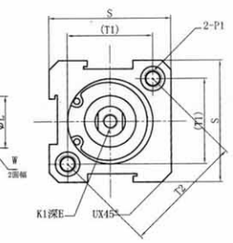

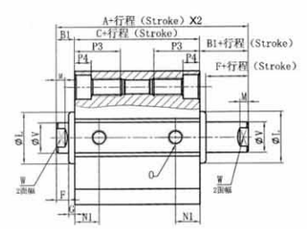

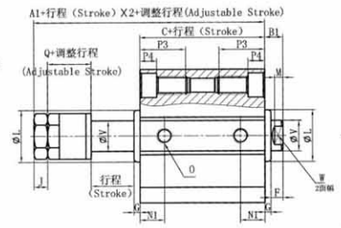

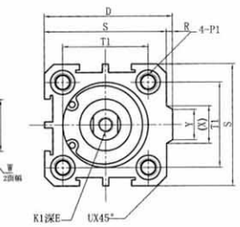

尺寸表/Dimension Sheet

Type / Bore	Standard Type A	Standard Type A1	Standard Type B1	Standard Type C	With Magnet A	With Magnet A1	With Magnet B1	With Magnet C	D	E <stroke	E stroke>10	F	G	J	K1	L	M	N1
12	27	40	5	17	37	50	5	27	-	6		4	1	4	M3×0.5	10.2	2.8	6.3
16	29.5	42.5	5.5	18.5	39.5	52.5	5.5	28.5	-	6		4	1.5	4	M3×0.5	11	2.8	7.3
20	30.5	47.5	5.5	19.5	40.5	57.5	5.5	29.5	36	8(行程=5、E=5.5)		4	1.5	5	M4×0.7	15	2.8	7.5
25	33	55	6	21	43	65	6	31	42	10(行程=5、E=7)		4	2	6	M5×0.8	17	2.8	8
32	38.5	61.5	7	24.5	48.5	71.5	7	34.5	50	8	12	4	3	6	M6×1	22	2.8	9
40	40	65	7	26	50	75	7	36	58.5	9	12	4	3	8	M8×1.25	28	2.8	10
50	46	73	9	28	56	83	9	38	71.5	11	15	5	4	11	M10×1.5	38	2.8	10.5
63	50	77	9	32	60	87	9	42	84.5	11	15	5	4	11	M10×1.5	40	2.8	11.8
80	63	94	11	41	73	104	11	51	104	14	20	6	5	13	M14×1.5	45	4	14.5
100	75	105	12	51	85	115	12	61	124	18	20	7	5	13	M18×1.5	55	4	20.5

Bore	N3	O	P1 double side	P1 cog	P1 through hole	P3	P4	Q	R	S	T1	T2	U	V	W	X	Y
12	6	M5×0.8	Φ6.5	M5×0.8	Φ4.2	12	4.5	13	-	25	16.2	23	1.6	6	5	-	-
16	6.5	M5×0.8	Φ6.5	M5×0.8	Φ4.2	12	4.5	13	-	29	19.8	28	1.6	6	5	-	-
20	-	M5×0.8	Φ6.5	M5×0.8	Φ4.2	14	4.5	16	2	34	24	-	2.1	8	6	11.3	10
25	-	M5×0.8	Φ8.2	M6×1	Φ4.6	15	5.5	19	2	40	28	-	3.1	10	8	12	10
32	-	G1/8	Φ8.2	M6×1	Φ4.6	16	5.5	21	6	44	34	-	2.2	12	10	18.3	15
40	-	G1/8	Φ10	M8×1.25	Φ6.5	20	7.5	21	6.5	52	40	-	2.3	16	14	21.3	16
50	-	G1/4	Φ11	M8×1.25	Φ6.5	25	8.5	21	9.5	62	48	-	4.2	20	17	30	20
63	-	G1/4	Φ11	M8×1.25	Φ6.5	25	8.5	21	9.5	75	60	-	3.2	20	17	28.7	20
80	-	G3/8	Φ14	M12×1.75	Φ9.2	25	10.5	24	10	94	74	-	3.7	25	22	36	26
100	-	G3/8	Φ17.5	M14×2	Φ11.3	30	13	24	10	114	90	-	3.7	32	27	35	26

SDA Series Compact Cylinder

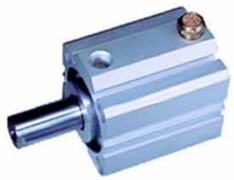

订购代号 / Ordering Code

SDA 25 X 50 - 25 - S - B

Model	Bore X Stroke	Adjustable Stroke	Magnet	Thread
SDA: double action SSA: single action spring extend STA: single action spring return SDAD: double-shaft ,double-action SDAJ: double-shaft, double-action & Adjustable Stroke Type		SDAJ	Blank: without magnet S: with magnet	Blank: female thread B: male thread N: no thread

规格/Specification

Bore		12	16	20	25	32	40	50	63	80	100
Action		double action									
		Single Action spring extend type or Single Action spring return type						—			
Working Medium		Air									
Working Pressure	double action	1-9Kgf/cm²									
	single action	2-9Kgf/cm²						—			
Proof Pressure		13.5Kgf/cm²									
Working Temperature		0-70 °C									
Operating Speed Range	double action	30-500						30-350		30-250	
	single action	100-500						-			
Port Size		M5×0.8				G1/8		G1/4		G3/8	

行程/Stroke

Bore		12 16	20	25		32 40 50 63 80 100	
Double Action	Without magnet	5-60mm Classified every 5mm	5-85mm Classified every 5mm	5-90mm Classified every 5mm	100-110mm Classified every 5mm	5-90mm Classified every 5mm	100-130mm Classified every 10mm
	With magnet	5-50mm Classified every 5mm	5-75mm Classified every 5mm	5-90mm Classified every 5mm	100mm	5-90mm Classified every 5mm	100-120mm Classified every 10mm
Single Action	Without magnet	5-30mm Classified every 5mm	5-30mm Classified every 5mm	5-30mm Classified every 5mm		5-30mm Classified every 5mm	-
	With magnet	5-30mm Classified every 5mm	5-30mm Classified every 5mm	5-30mm Classified every 5mm		5-30mm Classified every 5mm	-
Max.Storke		60mm	100mm	120mm		130mm	

CE ISO9001

外形尺寸/Overall Dimension

- TYPE: SDA、SDAS
- TYPE: ϕ12～ϕ16

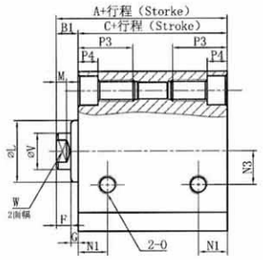

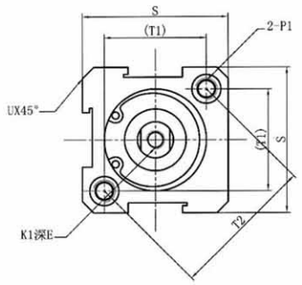

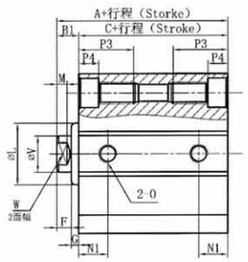

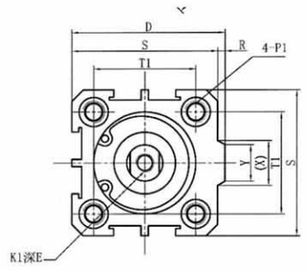

尺寸表/Dimension Sheet

Bore/Type	Standard Type A	Standard Type B1	Standard Type C	With Magnet A	With Magnet B1	With Magnet C	D	E stroke≤10	E stroke>10	F	G	K1	L	M	N1	N3
12	22	5	17	32	5	27	-	6		4	1	M3×0.5	10.2	2.8	6.3	6
16	24	5.5	18.5	34	5.5	28.5	-	6		4	1.5	M3×0.5	11	2.8	7.3	6.5
20	25	5.5	19.5	35	5.5	29.5	36	8		4	1.5	M4×0.7	15	2.8	7.5	-
25	27	6	21	37	6	31	42	10		4	2	M5×0.8	17	2.8	8	-
32	31.5	7	24.5	41.5	7	34.5	50	12		4	3	M6×1	22	2.8	9	-
40	33	7	26	43	7	36	58.5	12		4	3	M8×1.25	28	2.8	10	-
50	37	9	28	47	9	38	71.5	15		5	4	M10×1.5	38	2.8	10.5	-
63	41	9	32	51	9	42	84.5	15		5	4	M10×1.5	40	2.8	11.8	-
80	52	11	41	62	11	51	104	15	20	6	5	M14×1.5	45	4	14.5	-
100	63	12	51	73	12	61	124	18	20	7	5	M18×1.5	55	4	20.5	-

Bore	O	P1 double side	P1 Cog	P1 through hole	P3	P4	R	S	T1	T2	U	V	W	X	Y
12	M5×0.8	ϕ6.5	M5×0.8	ϕ4.2	12	4.5	-	25	16.2	23	1.6	6	5	-	-
16	M5×0.8	ϕ6.5	M5×0.8	ϕ4.2	12	4.5	-	29	19.8	28	1.6	6	5	-	-
20	M5×0.8	ϕ6.5	M5×0.8	ϕ4.2	14	4.5	2	34	24	-	2.1	8	6	11.3	10
25	M5×0.8	ϕ8.2	M6×1	ϕ4.6	15	5.5	2	40	28	-	2.1	10	8	12	10
32	G1/8	ϕ8.2	M6×1	ϕ4.6	16	5.5	6	44	34	-	2.2	12	10	18.3	15
40	G1/8	ϕ10	M8×1.25	ϕ6.5	20	7.5	6.5	52	40	-	2.3	16	14	21.3	16
50	G1/4	ϕ11	M8×1.25	ϕ6.5	25	8.5	9.5	62	48	-	4.2	20	17	30	20
63	G1/4	ϕ11	M8×1.25	ϕ6.5	25	8.5	9.5	75	60	-	3.2	20	17	28.7	20
80	G3/8	ϕ14	M12×1.75	ϕ9.2	25	10.5	10	94	74	-	3.7	25	22	36	26
100	G3/8	ϕ17.5	M14×2	ϕ11.3	30	13	10	114	90	-	3.7	32	27	35	26

外形尺寸/Overall Dimension

TYPE:CB双耳环/CB Double Earring

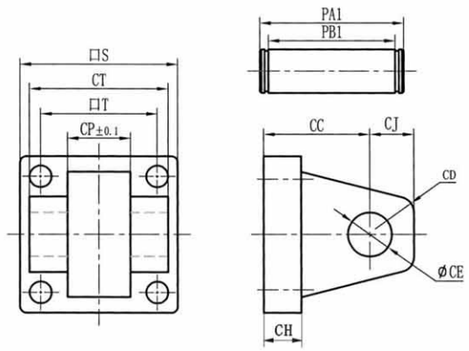

尺寸表/Dimension Sheet

Symbol/Bore	32	40	50	63	80	100	125
S	48	50	62	75	94	112	140
T	33	37	47	56	70	84	110
CC	19	19	19	19	32	32	50
CD	5	5	3	3	8	8	25
CE	12	14	14	14	20	20	25
CJ	13	13	15	15	21	21	25
CP	16.3	20.5	20.3	20.3	32.3	32.3	70
CT	32	44	52	52	64	64	120
PA1	41	51.8	60.3	60.3	73.8	73.8	130
PB1	33.5	45.8	54	54	65.5	65.5	121.5
CH	10	10	10	10	15	15	15

TYPE:TC、TC－M

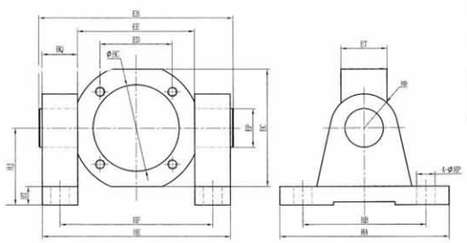

Symbol/Bore	40	50	63	80	100	125
EB	113	126	138	164	182	209
EC	63	76	88	114	132	154
ED	37	47	56	70	84	110
EE	63	76	88	114	132	158
EP	25	25	25	25	25	30
ET	30	30	30	35	40	36
HA	110	110	110	110	110	145
HB	80	80	80	80	80	105
HC	45.5	55.5	68.5	87.5	107.5	
HD	22	22	22	22	22	
HE	109	122	134	160	178	212
HF	86	99	111	137	155	185
HI	81.5	88	94	127	136	
HJ	50	50	50	70	70	85
HP	12	12	12	14	14	18
HQ	23	23	23	23	23	27
HT	12	12	12	14	14	28

TYPE: Y / I connection

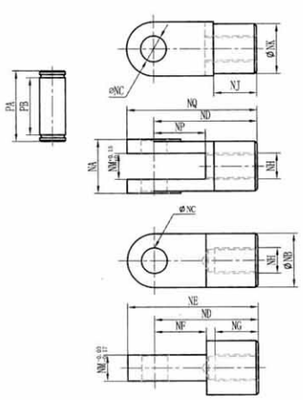

Bore symbol	16	20	25	32	40	50	63	80	100	125
NA	12	16	20	19	25.4	32	32	44.4	44.4	62
NB	6	8	10	20	24	32	32	40	40	49
NC	6	8	10	10	12	16	16	20	20	20
ND	24	32	40	40	48	64	64	80	80	100
NE	30	40	52	52	67	89	89	112	112	120
NF	8.5	11	15	15	24	32	32	40	40	
NG	10	15	20	20	20	23	23	30	30	55
NH	M6	M8	M10X1.25	M10X1.25	M12X1.25	M16X1.5	M16X1.5	M20X1.5	M20X1.5	M27X2
NJ	6	10	14	12	20	22	22	30	30	27
NK	11.5	14	18	18	23	30	30	39	39	38
NM	6	8	11	10	12	16	16	20	20	32.5
NP	10	17	21	20	24	32	32	40	40	40
NQ	30	40	51	52	62	83	83	105	105	120
PA	17	19	25	25	32.8	39.3	39.3	53.3	53.3	74
PB	12	16	20	19.5	26.5	33	33	45	45	64

CE ISO9001

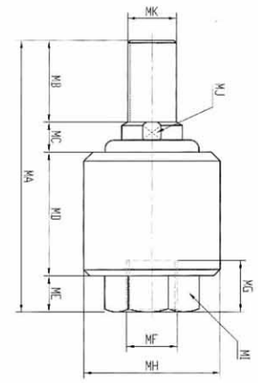

FDSF: Piston Rod Swivel

FDSF 20 X 1.5 FDSF 16 X 1.5

Bore/Symbol	MA	MB	MC	MD	ME	MF	MG	MH	MI	MJ	MK
20	51	20	6	17	8	M8×1.25	12	24	13	8	M8×1.25
25	58	22	7	21	8	M10×1.25	12	26	17	10	M10×1.25
32	58	22	7	21	8	M10×1.25	12	26	17	10	M10×1.25
40	58	22	8	21	7	M12×1.25	12	28	19	12	M12×1.25
50	90	27	10	41	12	M16×1.5	14	45	27	15	M16×1.5
63	90	27	10	41	12	M16×1.5	14	45	27	15	M16×1.5
80	102	29	13	46	14	M20×1.5	18	53	33	22	M20×1.5
100	102	29	13	46	14	M20×1.5	18	53	33	22	M20×1.5

PHSA: Oscillating Eye

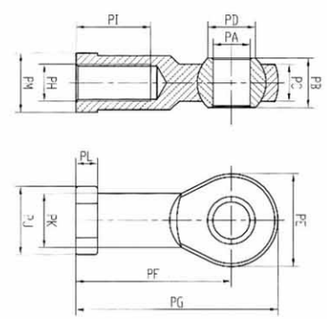

Bore/Symbol	PA	PB	PC	PD	PE	PF	PG	PH	PI	PJ	PK	PL	PM
20	8	12	9	10.4	22	36	47	M8×1.25	17	16	12.5	5	14
25	10	14	11	12.9	26	43	56	M10×1.25	21	19	15	6.5	17
32	10	14	11	12.9	26	43	56	M10×1.25	21	19	15	6.5	17
40	12	16	12	15.4	30	50	65	M12×1.25	24	22	17.5	6.5	19
50	16	21	15	19.3	38	64	83	M16×1.5	33	27	22	8	22
63	16	21	15	19.3	38	64	83	M16×1.5	33	27	22	8	22
80	20	25	18	24.3	46	77	100	M20×1.5	40	34	27.5	10	32
100	20	25	18	24.3	46	77	100	M20×1.5	40	34	27.5	10	32

外形尺寸/Overall Dimension

TYPE:SC

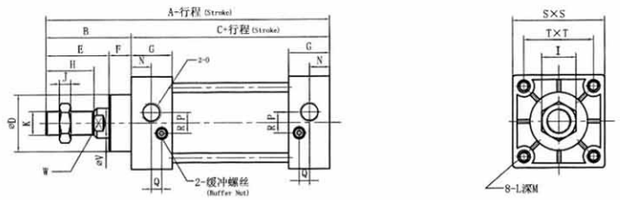

TYPE:SCD

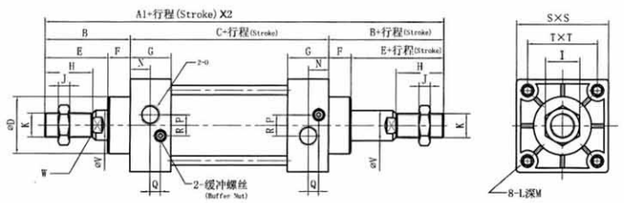

TYPE:SCJ

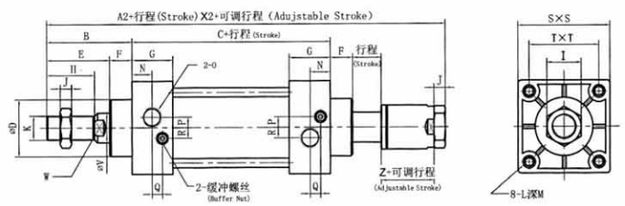

尺寸表/Dimension Sheet

Bore/Symbol	A	A1	A2	B	C	D	E	F	G	H	I	J	K	L
32	140	187	182	47	93	28	32	15	27.5	22	17	6	M10×1.25	M6×1
40	142	191	185	49	93	32	34	15	27.5	24	17	7	M12×1.25	M6×1
50	150	207	196	57	93	38	42	15	27.5	32	23	8	M16×1.5	M6×1
63	153	210	199	57	96	38	42	15	27.5	32	23	8	M16×1.5	M8×1.25
80	182	258	242	75	107	47	54	21	33	40	26	10	M20×1.5	M10×1.5
100	188	264	248	75	113	47	54	21	33	40	26	10	M20×1.5	M10×1.5
125	220	312	286	92	128	55	62	30	33	45	35	11	M27×2	M12
160	311	454	418	143	168	635	103	40	50	72		12	M36×2	M16×2

Bore/Symbol	M	N	O	P	Q	R	S	T	V	W
32	9.5	13.7	G1/8	3.5	7.5	7	45	33	12	10
40	9.5	13.5	G1/4	6	8.2	9	50	37	16	14
50	9.5	13.5	G1/4	8.5	8.2	9	62	47	20	17
63	9.5	13.5	G3/8	7	8.2	8.5	75	56	20	17
80	11.5	16.5	G3/8	10	9.5	14	94	70	25	22
100	11.5	16.5	G1/2	11	9.5	14	112	84	25	22
125	12	16.5	G1/2	10	7.5	10	138	110	32	29
160	12	25	G1/2	9			180	138	40	36

CE ISO9001

SC Standard Cylinder Accesory

外形尺寸/Overall Dimension

TYPE:LB脚架/Foot Rest

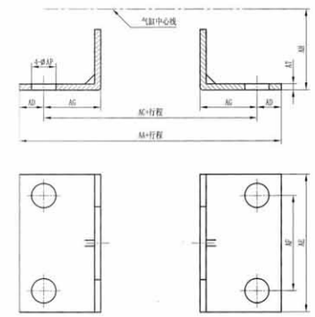

TYPE:FA、FB法兰/Flange

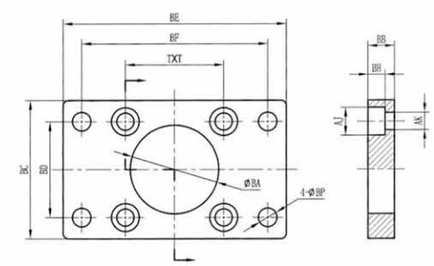

TYPE:CA单耳环/Single Earring

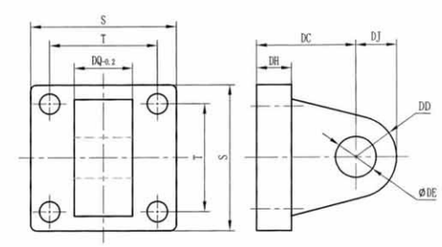

尺寸表/Dimension Sheet

Symbol/Bore	32	40	50	63	80	100	125
AA	153	169	173	184	199	209	249
AC	134	140	149	158	167	173	213
AD	9.5	14.5	12	13	16	18	18
AE	50	57	68	80	97	112	140
AF	33	36	47	56	70	84	90
AG	20.5	23.5	28	31	30	30	45
AH	28	30	36.5	41	49	57	90
AP	9	12	12	12	14	14	16
AT	3.2	3.2	3.2	3.2	4	4	8

Symbol/Bore	32	40	50	63	80	100	125
BA	28.3	32.3	38.3	38.3	47.3	47.3	56
BB	10	10	10	12	16	16	20
BC	47	52	65	76	95	115	140
BD	33	36	47	56	70	84	90
BE	72	84	104	116	143	162	224
BF	58	70	86	98	119	138	180
BH	6.5	6.5	6.5	8.5	10.5	10.5	15
AJ	10.5	10.5	10.5	13.5	16.5	16.5	19
AK	6.5	6.5	6.5	8.5	10.5	10.5	12.5
BP	7	7	9	9	11	11	16
T	33	37	47	56	70	84	110

Symbol/Bore	32	40	50	63	80	100	125
S	44	50	62	75	94	112	140
T	33	37	47	56	70	84	110
DC	30	34	34	34	48	48	50
DD	13	14	15	15	20	20	25
DE	12	14	14	14	20	20	25
DJ	13	14	15	15	20	20	25
DQ	18	20	20	20	32	32	70
DH	10	10	10	10	15	15	15

SC/SU Series Standard Cylinder

SC100 X 100 SC63 X 100 SU63 X 100

SUJ63X100-30 SCJ63X100-30 SUD63X100 SCD63X100

订购代号 / Ordering Code

SC	D	50 X 50	- 25	- S	- FA
Model	Type	Bore X Stroke	- Adjustable Stroke	- Magnet	- Fixed Type
SC: tie rod outside cylinder SU: tie rod inside cylinder	Blank: Standard double action D: Double-shaft & double-action J: Double-shaft, double-action & adjustable stroke Type		SC(U)J	Blank: without magnet S: with magnet	LB: Front and rear bracket FA: Front mounting flange FB: Rear mounting flange CA: Rear clevis(single earring) CB: Rear clevis(double earring) TC: Swiveling bracket TC-M: Swiveling bracket with foot seat

CE ISO9001

规格/Specification

Bore	32	40	50	63	80	100	125	160	200
Action	Double Action								
Working Medium	Air								
Fixed Type	Basic type, FA, FB, CA, CB, LB, TC, TC-M								
Working Pressure	1~9 Kgf/cm ^{2}								
Proof Pressure	13.5Kgf/cm ^{2}								
Working Temperature	0~70℃								
Operating Speed Range	50~800mm/s								
Cushion Type	Adjustable Cushion								
Adjustable Cushion Stroke	20					25			
Port Size	G1/8	G1/4			G3/8		G1/2		

※SCD、SCJ Fixed Type：FA、FB、LB、TC、TC—M。

气缸理论出力表/ Cylinder Theory Output Sheet

Bore		32		40		50		63		80		100		125	
活塞杆外径 External Diameter of Piston Rod		12		16		20		20		25		25		32	
Action Type		double-action		double-action		double-action		double-action		double-action		double-action		double-action	
		press side	pull side	press side	pull side	press side	pull side	press side	pull side	press side	pull side	press side	pull side	press side	pull side
受压面积 cm² Compression Area		8.04	6.9	12.56	10.55	19.63	16.49	31.17	28.03	50.26	45.36	78.53	73.62	122.7	114.6
air pressure (kgf/cm)^2	1	8.04	6.9	12.56	10.55	19.63	16.49	31.17	28.03	50.26	45.36	78.53	73.62	122.7	114.6
	2	16.08	13.8	25.12	21.1	39.26	32.98	62.34	56.06	100.52	90.72	157.06	147.24	245.4	229.2
	3	24.12	20.7	37.68	31.65	58.89	49.47	93.51	84.09	150.78	136.08	235.59	220.86	368.1	343.8
	4	32.16	27.6	50.24	42.20	78.52	65.96	124.68	112.12	201.04	181.44	314.12	294.48	490.8	458.4
	5	40.20	34.5	62.80	52.75	98.15	82.45	155.85	140.15	251.30	226.80	392.65	368.10	613.5	573.0
	6	48.24	41.4	75.36	63.30	117.78	98.94	187.02	168.18	301.56	272.16	471.18	441.72	736.2	687.6
	7	56.28	48.3	87.92	73.85	137.41	115.43	218.19	196.21	351.82	317.52	549.71	515.34	858.9	802.2
	8	64.32	55.2	100.48	84.40	157.04	131.92	249.36	224.24	402.08	362.88	628.24	588.96	981.6	916.8
	9	72.36	62.1	113.04	94.95	176.67	148.41	280.53	252.27	452.34	408.24	706.77	662.58	1104.3	1031.4

行程/Stroke

Bore	Standard Stroke	Max. Stroke	Allowable Stroke
32	25 50 75 100 125 150 175 200 250 300 350 400 450 500	1000	2000
40	25 50 75 100 125 150 175 200 250 300 350 400 450 500 600 700 800	1200	2000
50	25 50 75 100 125 150 175 200 250 300 350 400 450 500 600 700 800 900 1000	1200	2000
63	25 50 75 100 125 150 175 200 250 300 350 400 450 500 600 700 800 900 1000	1500	2000
80	25 50 75 100 125 150 175 200 250 300 350 400 450 500 600 700 800 900 1000	1500	2000
100	25 50 75 100 125 150 175 200 250 300 350 400 450 500 600 700 800 900 1000	1500	2000
125	25 50 75 100 125 150 175 200 250 300 350 400 450 500 600 700 800 900 1000	1500	2000

※Please contact with our company if your cylinder stroke is special.

外形尺寸/Overall Dimension

TYPE:DNC

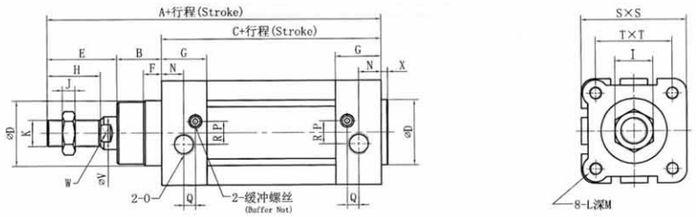

TYPE: DNCD

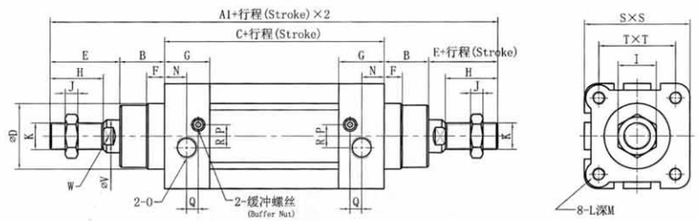

TYPE: DNCJ

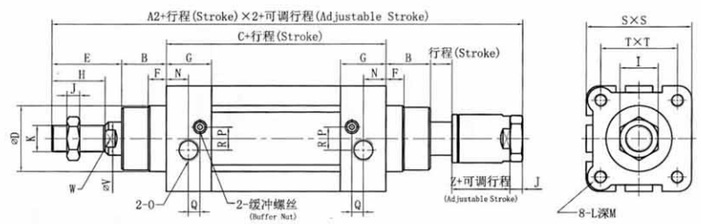

尺寸表/Dimension Sheet

Bore/Symbol	A	A1	A2	B	C	D	E	F	G	H	I	J	K	L
32	142	190	185	16	94	30	32	10	25	22	17	6	M10×1.25	M6
40	159	213	207	20	105	35	34	10	29.5	24	17	7	M12×1.25	M6
50	175	244	233	27	106	40	42	10	32	32	23	8	M16×1.5	M8
63	190	258	247	26	122	45	42	10	36	32	23	8	M16×1.5	M8
80	214	301	288	35	127	45	52	10	37	40	30	10	M20×1.5	M10
100	229	321	308	40	137	55	52	10	39	40	30	10	M20×1.5	M10

Bore/Symbol	M	N	O	P	Q	R	S	T	V	W	X	Z
32	12	15	G1/8	5	3	6.5	45	32.5	12	10	4	21
40	12	17.5	G1/4	7	3	7	52	38	16	13	4	21
50	12	21	G1/4	7	3	9	64	46.5	20	17	4	23
63	12	23	G3/8	8	5	9	75	56.5	20	17	4	23
80	15	24	G3/8	10	5	12	93	72	25	22	5	29
100	15	26	G1/2	10	5	14	112	89	25	22	6	29

CE ISO9001

DNC Series Standard Cylinder Accessory

外形尺寸/Overall Dimension

LB: Front & Rear brackets

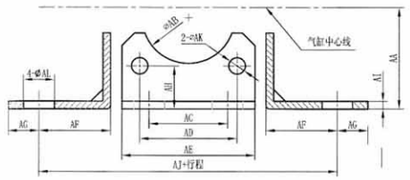

尺寸表/Dimension Sheet

Symbol/Bore	32	40	50	63	80	100
AA	32	36	45	50	63	71
AB(mm)	30	35	40	45	45	55
AC	32	38	46	56	72	89
AD	32.5	38	46.5	56.5	72	89
AE	45	52	65	76	94	112
AF	24	28	32	31.5	41.5	41.5
AG	9	11	11	11	14	16
AH	15.8	17	21.8	21.8	27	26.5
AI	3.2	3.2	3.2	3.2	4	4
AJ	142	161	170	185	210	220
AK	6.5	6.5	8.5	8.5	10.5	10.5
AL	7	9	9	9	12	14

FA / FB : Front / Rear mounting flange

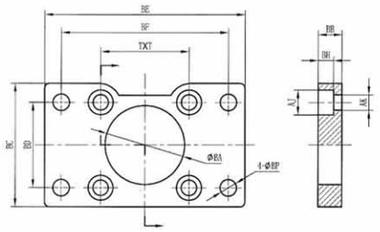

Symbol/Bore	32	40	50	63	80	100
BA	30.3	35.3	40.3	45.3	45.3	55.3
BB	10	10	12	12	16	16
BC	45	52	65	76	94	112
BD	32	36	45	50	63	75
BE	80	90	110	120	150	175
BF	64	72	90	100	126	150
BH	6.5	6.5	8.5	8.5	10.5	10.5
AJ	10.5	10.5	13.5	13.5	16.5	16.5
AK	6.5	6.5	8.5	8.5	10.5	10.5
BP	7	9	9	9	12	14
T	32.5	38	46.5	56.5	72	89

CA: Single Earring

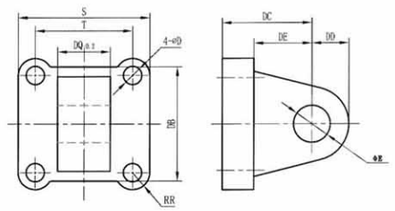

Symbol/Bore	32	40	50	63	80	100
S	45	52	65	76	94	112
T	32.5	38	46.5	56.5	72	89
RR	6.5	6.5	9	9.5	11	11.5
DB	34	41	54	65	83	101
DC	22	25	27	32	36	41
DD	10	11	13	16	16	20
DE	14	17	17	22	24	25
DQ	26	28	32	40	50	60
D	6.5	6.5	8.5	8.5	10.5	10.5
E	10	12	12	16	16	20

CB: Double Earring

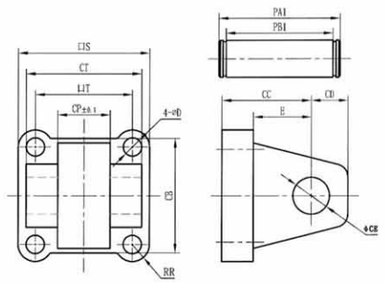

Symbol/Bore	32	40	50	63	80	100
S	45	52	65	76	94	112
T	32.5	38	46.5	56.5	72	89
D	6.5	6.5	8.5	8.5	10.5	10.5
E	14	17	17	22	24	25
RR	6.5	6.5	9	9.5	11	11.5
CB	34	41	54	65	83	101
CC	22	25	27	32	36	41
CD	10	11	13	16	16	20
CE	10	12	12	16	16	20
CP	26	28	32	40	50	60
CT	45	52	60	70	90	110
PA1	53	60	68	78	100	120
PB1	46.5	53.5	61.5	71.5	91.5	111.5

外形尺寸/Overall Dimension SI Series Standard Cylinder

TYPE: CR / Rear clevis(double earring)

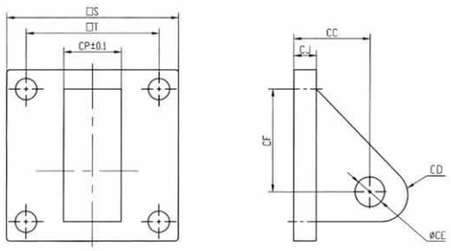

尺寸表/Dimension Sheet

Symbol/Bore	32	40	50	63	80	100	125	160	200
S	47	53	65	75	95	115	140	180	220
T	32.5	38	46.5	56.5	72	89	110	140	175
CC	22	25	27	32	36	41	90	115	135
CD	9	12	12	15	15	20	22	31	31
CE	10	12	12	16	16	20	25	30	30
CF	21	24	33	37	47	55	70	97	105
CJ	8	10	12	12	14	15	20	25	30
CP	25.8	27.8	31.7	39.7	49.7	59.7	69.7	89.7	89.7

TYPE: TC、TC—M / Swiveling bracket

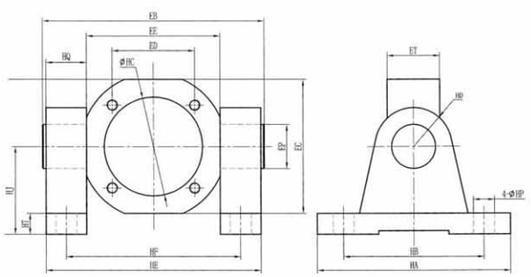

Symbol/Bore	32	40	50	63	80	100
EB	100	113	125	140	168	182
EC	50	58	70	80	100	126
ED	32.5	38	46.5	56.5	72	89
EE	50	63	75	90	110	132
EP	12	16	16	20	20	25
ET	20	24	28	28	28	28
HA	110	110	110	120	120	120
HB	80	80	80	80	85	85
HC	36	45	55	58	86	106
HD	22	22	22	22	22	22
HE	96	109	121	136	156	178
HF	73	86	98	113	133	155
HI	68.5	76.5	82	86	113	130
HJ	43.5	47.5	47	46	63	67
HP	12	12	12	12	14	14
HQ	23	23	23	23	23	23
HT	12	12	12	12	14	14

TYPE: Y / I Connection

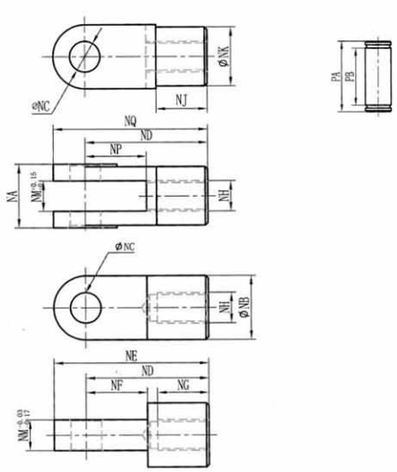

Symbol/Bore	32	40	50	63	80	100	125	160	200
NA	19	25.4	32	32	44.4	44.4	55	70	70
NB	20	24	32	32	40	40			
NC	10	12	16	16	20	20	30	35	35
ND	40	48	64	64	80	80	110	144	144
NE	52	67	89	89	112	112	155	201	201
NF	15	24	32	32	40	40	51	65	65
NG	20	20	23	23	30	30			
NH	M10X1.25	M12X1.25	M16X1.5	M16X1.5	M20X1.5	M20X1.5	M27X2.0	M36X2.0	M36X2.0
NJ	12	20	22	22	30	30			
NK	18	23	30	30	39	39			
NM	10	12	16	16	20	20	30	35	35
NP	20	24	32	32	40	40	54	72	72
NQ	52	62	83	83	105	105	148	191	191
PA	26.2	32.8	39.3	39.3	53.3	53.3	64	80	80
PB	20	26.5	33	33	45	45	55.6	70.6	70.6

CE ISO9001

DNC Series Standard Cylinder
(ISO15552 Standard)

DNC32X50

DNC50X50

DNC80X100

订购代号 / Ordering Code

DNC D 50 X 50 - 25 - S - FA

Model	Type	Bore X Stroke - Adjustable Stroke	Magnet	Fixed Type
DNC	Blank: Standard double action D: Double-shaft & double-action J: Double-shaft, double-action & adjustable stroke Type	DNCJ	Blank: without magnet S: with magnet	Blank: Basic Type LB: Front & rear brackets FA: Front mounting flange FB: Rear mounting flange CA: Rear clevis(single earring) CB: Rear clevis(double earring) CR: Rear clevis(double earring) TC: Swiveling bracket TC-M: Swiveling bracket with foot seat

规格/Specification

Bore(mm)	32	40	50	63	80	100
Action	Double Action					
Working Medium	Air					
Fixed Type	Basic Type, FA,FB, CA, CB, CR, LB, TC,TC-M					
Working Pressure	1~9 Kgf/cm²					
Proof Pressure	13.5Kgf/cm²					
Working Temperature	0~70℃					
Operating Speed Range	50~800mm/s					
Cushion Type	Adjustable Cushion					
Adjustable Cushion Stroke	24					32
Port Size	G1/8	G1/4		G3/8		G1/2

*DNCD,DNCJ Mounting Type: FA FB LB TC TC-M

CE ISO9001

SI Series Standard Cylinder Accessory

外形尺寸/Overall Dimension

TYPE: LB / Front & Back brackets

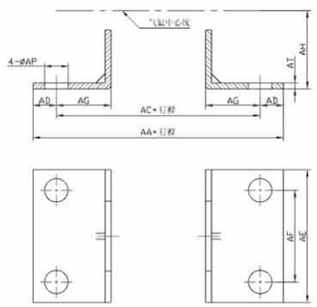

尺寸表/Dimension Sheet

Symbol/Bore	32	40	50	63	80	100	125	160	200
AA	158	179	190	209	248	258	290	340	380
AC	142	161	170	185	210	220	250	300	320
AD	8	9	10	12	19	19	20	20	30
AE	47	53	65	75	95	115	140	180	220
AF	32.5	36	45	50	63	75	90	115	135
AG	24	27.5	32	32	41	45	45	60	70
AH	32	36	45	50	63	71	90	115	135
AP	7	9	9	9	12.5	14.5	16	18	22
AT	4	4	4	4	5	5	8	8	9

TYPE: CA / Single Earring

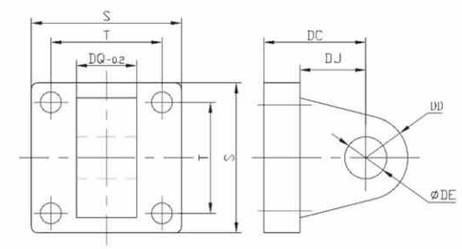

尺寸表/Dimension Sheet

Symbol/Bore	32	40	50	63	80	100	125	160	200
S	47	53	65	75	95	115	140	180	220
T	32.5	38	46.5	56.5	72	89	110	140	175
DC	22	25	27	32	36	41	50	55	60
DD	9	12	12	15	15	20	25	30	30
DE	10	12	12	16	16	20	25	30	30
DJ	13	16	17	22	22	27	33	35.5	37
DQ	25.8	27.8	31.7	39.7	49.7	59.7	69.7	89.7	89.7

TYPE: FA,FB / Front & Rear Mounting flange

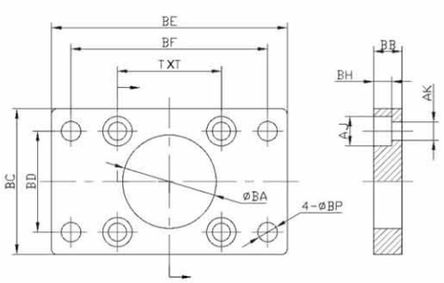

尺寸表/Dimension Sheet

Symbol/Bore	32	40	50	63	80	100	125	160	200
BA	30.5	35.5	40.5	45.5	45.5	55.5	60.5	65.5	75.5
BB	10	10	12	12	16	16	20	20	25
BC	50	55.5	65	75	95	115	140	180	220
BD	32	36	45	50	63	75	90	115	135
BE	80	90	110	125	154	186	224	280	320
BF	64	72	90	100	126	150	180	230	270
BH	6.4	6.4	8	7.5	6	6	8	8	12
AJ	10.5	10.5	14	14	16.5	17	19	25	25
AK	7	7	9	9	11	11	13	17	17
BP	7	9.5	9	9	11	14.5	16	18	22
T	32.5	38	46.5	56.5	72	89	110	140	175

TYPE: CB / Double Earring

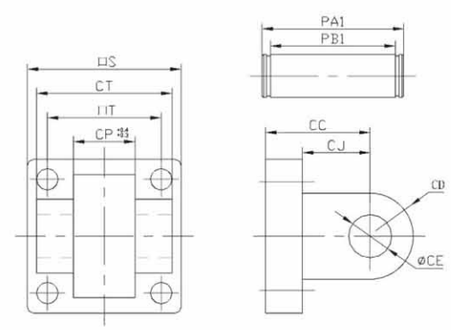

尺寸表/Dimension Sheet

Symbol/Bore	32	40	50	63	80	100	125	160	200
S	45	52	65	75	95	115	140	180	220
T	32.5	38	46.5	56.5	72	89	110	140	175
CC	22	25	27	32	36	41	50	55	60
CD	9	12	12	15	15	20	8	9	9
CE	10	12	12	16	16	20	25	30	30
CJ	13	16	17	22	22	27	31	35.5	36
CP	26	28	32	40	50	60	70	90	90
CT	45	52	60	70	90	110	130	170	170
PA1	52.5	60	68	79.5	99	119	139	181	181
PB1	46	53.5	62	72	90.5	110.5	131.5	171.5	171.5